E.P. No. 97-094-LV

COUNTY OF SAN JOAQUIN
DEPARTMENT OF PUBLIC WORKS

P.O. BOX 1810 - 1810 E. HAZELTON AVENUE
STOCKTON, CALIFORNIA 95201
(209) 468-3000

HENRY M. HIRATA
DIRECTOR

ENCROACHMENT PERMIT

3-19-97
(Date Issued)

8-1-97
(Expiration Date)

11005
(Job No.)

To: Brooks Fiber Communications of Stockton
400 E. Main St., Suite 750
Stockton, CA 95290

Encroachment type: Bore

Location: s/s El Camino Ave. &
e/s Pershing Ave.
(See Maps)

In compliance with your request of 3-18, 19 97, permission is her by granted to do work in County right of way as shown on attached application and subject to all the terms, conditions and restrictions written below or printed as general or special provisions on any part of this form. See reverse side and attached sheet, if any.

Trench excavations for service connections will not be permitted within ten feet (10') of pavement centerline unless otherwise approved by the Director. Surface of trench patches shall match in kind and be smooth and even with that of abutting surface. Special attention shall be given to depth of utilities through roadside area in anticipation of future drainage facilities, road profile and/or frontage development. All underground utility facilities are to be established and accurately dimensioned on sketches from surveyed centerline of road right of way, not from right of way (border) lines.

The Department of Public Works, Field Inspection Section shall receive a notice at least forty-eight (48) hours prior to beginning any work within the County right of way. All work performed under this permit shall conform to the rules and regulations pertaining to safety established by the California Division of Industrial Safety and Cal-OSHA.

The jobsite shall be kept in a safe condition at all times by the daily removal of any excess dirt or debris which might be a hazard to either pedestrian or automobile traffic. All necessary traffic convenience and warning devices and personnel shall be provided, placed and maintained by and at the sole expense of the Permittee in accordance with the latest edition of the CALTRANS Manual of Traffic Control.

After completion of the work permitted herein, all debris, lumber, barricades, or any excess material shall be removed and the jobsite left in a neat workmanlike manner. Immediately following completion of construction permitted herein, Permittee shall fill out and mail notice of completion provided by Grantor.

Est. Permit Fee: $ 640.00

FORMS: SS/WW,R-29

HENRY M. HIRATA, Director
Department of Public Works

By _____
Permit Section

WHITE - Permittee
GOLDENROD - PWD Central File
YELLOW - Field Inspection
PINK - Permit Section

PW 27

GENERAL PROVISIONS

1. This permit is issued under and subject to all laws and ordinances of agencies governing the encroachment herein permitted. See the following references:

STREETS AND HIGHWAYS CODE

1. Division 1, Chapter 3
2. Division 2, Chapter 2, Section 942
3. Division 2, Chapter 4, Section 1126
4. Division 2, Chapter 6

SAN JOAQUIN COUNTY ORDINANCES NUMBERED: 324, 441, 648, 662, 672, 695, 700, 860 and 892.

2. It is understood and agreed by the Permittee that the doing of any work under this permit shall constitute an acceptance of all the provisions contained herein and failure on the permittee's part to comply with any provision will be cause for revocation of this permit. Except as otherwise provided for public agencies and franchise holders, this permit is revocable on five days' notice.

3. All work shall be done subject to the supervision of and to the satisfaction of the grantor. The Permittee shall at all times during the progress of the work keep the County Highway in as neat and clean a condition as is possible and upon completion of the work granted herein, shall leave the County Highway in a thoroughly neat, clean and usable condition.

4. The Permittee agrees by the acceptance of this permit to properly maintain any encroachment structure placed by the Permittee on any part of the County Highway and to immediately repair any injury to any portion of the highway, which occurs as a result of the maintenance of the said encroachment structure, until such time as the Permittee may be relieved of the responsibility of such maintenance of the encroachment structure by the County Department of Public Works.

5. The Permittee also agrees by the acceptance of this permit to make, at its own expense, such repairs as may be deemed necessary by the County Director of Public Works or his representative.

6. It is further agreed by the Permittee that whenever construction, reconstruction or maintenance work upon the highway may require, the installation provided for herein shall, upon request of the County Department of Public Works, be immediately moved by and at the sole expense of the Permittee.

7. No material used for fill or backfill in the construction of the encroachment shall be borrowed or taken from within the County right of way.

8. All work shall be planned and carried out so that there will be as little inconvenience as possible to the traveling public. No material shall be stacked within eight feet (8') of the edge of the pavement or traveled way unless otherwise provided herein. Adequate provision shall be made for the protection of the traveling public. Barricades shall be placed, with approved signs and lights at night, and flagmen shall be employed, all as may be required by the particular work in progress.

9. The Permittee, by the acceptance of this permit, shall assume full responsibility for all liability for personal injury or damage to property which may arise out of the work herein permitted or which may arise out of the failure of the part of the Permittee to do the work provided for under this permit. In the event any claim of such liability is made against the County of San Joaquin or any department, official or employee thereof, the Permittee shall defend, indemnify, and hold them and each of them harmless for such claim.

10. All backfill material is to be moistened as necessary and thoroughly compacted with mechanical means. If required by the County Director of Public Works, such backfill shall consist of gravel or crushed rock. The Permittee shall maintain the surface over structures placed hereunder as may be necessary to insure the return of the roadway to a completely stable condition and until relieved of such responsibility by the County Department of Public Works. Wherever a gravel, crushed rock or asphalt surfacing is cut or damaged in the work of placing an encroachment structure, such material shall either be separately stored and replaced in the roadway as nearly as possible in its original state or shall be replaced in kind, and the roadway shall be left in at least as good a condition as it was before the commencement of operations of placing the encroachment structure.

11. Whenever necessary to secure permission from abutting property owners, such abuthority must be secured by the Permittee prior to starting work.

12. The future safety and convenience of the traveling public shall be given every consideration in the location and type of construction.

094

APPL. ATION FOR ENCROACHMI T PERMIT

PLEASE PRINT:

Date 3-18-97

To: San Joaquin County Highway Department.

BROOKS FIBER COMMUNICATIONS OF STOCKTON
(Applicant Name)

400 E. MAIN ST. SUITE 750
(Mailing Address)

STOCKTON, CA 95290
(City, State Zip Code)

(209) 943-3663
(Area Code - Telephone Number)

OFFICE USE ONLY

JOB # 11005 REF# _____
APN ___ - ___ - ___ CRV# _____
EXP. DATE AUG. 1, 1997
VALID APRIL 15, 97 TO _____ DRIVEWAYS:
STREET EL CAMINO AVE, PERSHING AVE * _____
AREA STKN QUAD LV. * _____
TYPE BORE * _____
FORMS SS/WW, R-29
NOTE _____

Sketch (Detailed plans may be submitted)

DETAILED DRAWINGS OF WORK ORDER # ST013 ATTACHED. WORK LOCATED WITHIN COUNTY JURISDICTION HIGHLIGHTED IN ORANGE ON KEY MAP AND DRAWINGS.

RECEIVED
SAN JOAQUIN COUNTY
97MAR 18 P 2:02
DEPT. OF PUBLIC WORKS

The undersigned hereby applies for permission to excavate, construct and / or otherwise encroach on County Highway Right-of-Way on the SOUTH side of EL CAMINO & EAST SIDE OF PERSHING approximately 5100 feet ~~/mile~~ _____ of _____, _____, by performing the following work: (description of work): INSTALL UNDERGROUD FIBER-OPTIC NETWORK AS SHOWN ON DETAILED PLANS ATTACHED.

Work will commence on or about APRIL 15, 1997 for approximately 75 days.

I the undersigned certify that I am the owner of the respective property, or am qualified to represent the owner and agree to do the work described above in accordance with the rules, regulations of San Joaquin County and subject to inspection and approval.

RW AGENT
SIGNATURE OF APPLICANT - TITLE

3-18-97
DATE

WORK ORDER #ST013

Issued by Brooks Fiber Properties, Inc. ("Brooks") for the following project: Stockton, CA - Northeast Ring.

SCOPE OF WORK

The Work for this Project consists of the work and items described below and in the noted Drawings and Specifications, and all Work included in the Scope of Work as defined in the Master Agreement and Standard Provisions.

1. Perform a pre-installation test on 21,187 feet of 96-fiber optic cable and 3,942 feet of 24-fiber optic cable using an OTDR at 1550 nanometers one direction. Provide OTDR trace and disk to Brooks.

2. Install an underground fiber-optic network consisting of approximately 1 30" diameter manhole, 23 30"x48"x36" handholes, 116 feet of 4" Schedule 40 PVC conduit, 20,456 feet of 4" HDPE SDR 13.5, 20,569 feet of 3-1 1/4" innerduct, 398 feet of 1-1 1/4" innerduct, 21,187 feet of 96-fiber optic cable, 3,942 feet of 24-fiber optic cable, 20,860 feet of trace wire, 23 ground rods and 6 splice enclosures.

3. Perform fiber splices in six locations.

4. Perform a post-installation/final acceptance test on an installed fiber optic cable using an OTDR at 1550 nanometers one direction. In addition, perform an optical power test using the insertion loss method bi-directional. Test results shall be provided to Brooks using the loss data sheet in the Specifications. OTDR trace and disk shall be delivered to Brooks.

(Please enter total job cost in the "Completed Value" section of this document. In addition, enter unit pricing for this job in Attachment 1)

NORTHEAST RING

CITY OF STOCKTON, CALIFORNIA

[redacted]

N

UNDERGROUND SECTION
1548 EL CAMINO
FOR ALIGNMENT SEE DWG.
BRK-2882B-1251 SHEET NO. 1

UNDERGROUND SECTION
NORTHEAST LOOP
FOR ALIGNMENT SEE DWG.
BRK-2882B-1101 SHEET NO. 28

BRIDGE ATTACHMENT
NORTHEAST RING
FOR ALIGNMENT SEE DWG.
BRK-2882B-3601 SHEET NO. 1

UNDERGROUND SECTION
PAC-BELL ENTRANCE
FOR ALIGNMENT SEE DWG.
BRK-2882B-1201 SHEET NO. 1

UNDERGROUND SECTION
NORTHEAST RING
FOR ALIGNMENT SEE DWG.
BRK-2882B-1101 SHEET NO. 1

UNDERGROUND SECTION
NORTHEAST RING
FOR ALIGNMENT SEE DWG.
BRK-2882B-1101 SHEET NO. 53

UNDERGROUND SECTION
NORTH OUTER RING
FOR ALIGNMENT SEE DWG.
BRK-2402B-1301 SHEET NO. 8

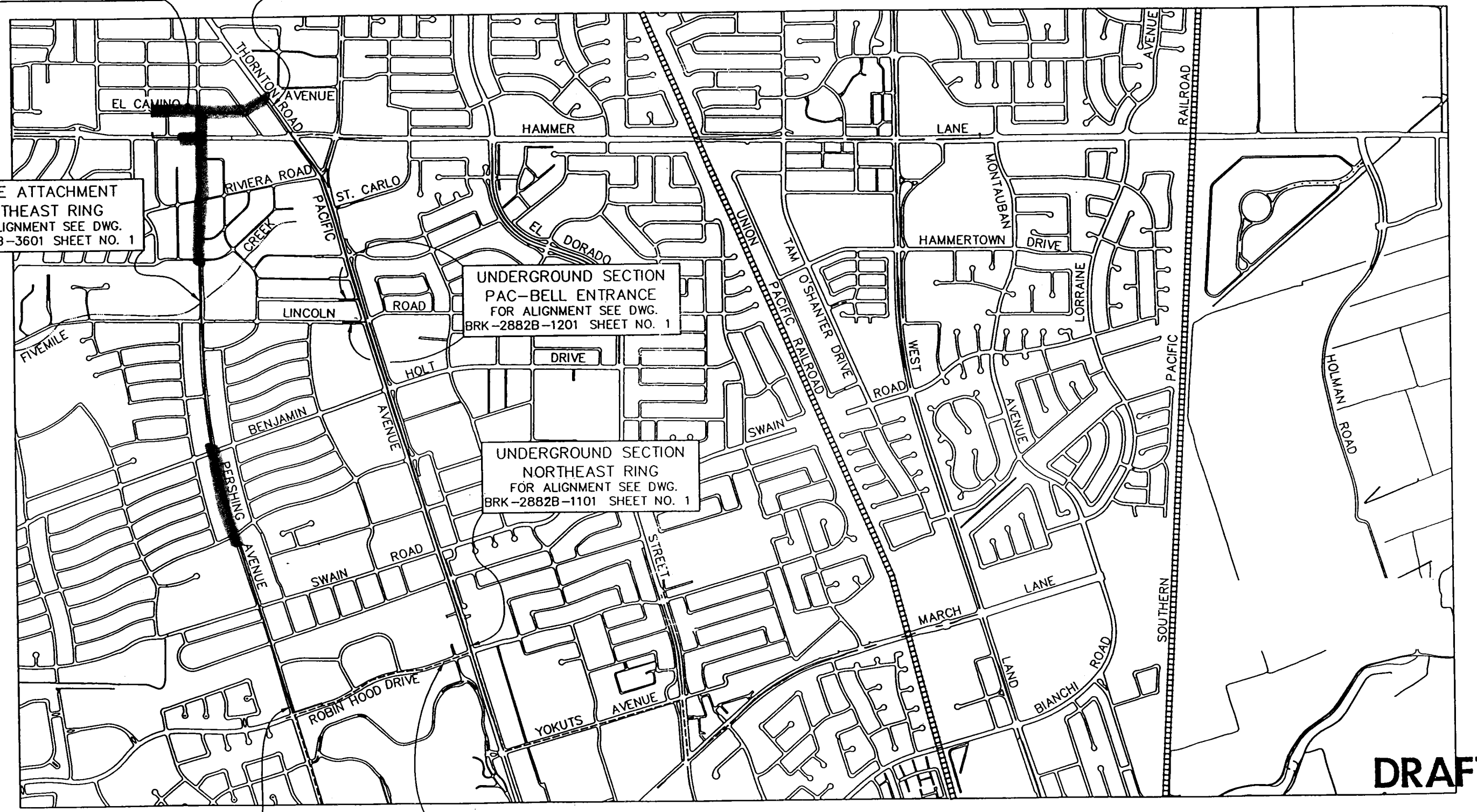

DRAFT

CITY

[redacted]

SCALE - 1"=1500'

BROOKS FIBER COMMUNICATIONS OF STOCKTON, CA, INC.

INFORMATION IN THIS DOCUMENT PROPRIETARY AND SHALL NOT USED, COPIED, REPRODUCED OR DISCLOSED IN WHOLE OR IN PART WITHOUT WRITTEN CONSENT OF BROOKS FIBER COMMUNICATIONS

STOCKTON, CA
EXCHANGE

UNIVERSAL
5118 S. 95th. E. AVE.
TULSA, OK 74145-8115
(918) 622-8330
FAX 918-664-6150

DATE: 11/26/96
REVISED:
MAP NO.: S820201_

FILE INFO: S820201_ 1=1500 11/26/1996 14:37 AGK

BROOKS FIBER COMMUNICATIONS
STOCKTON, CA, INC.

STOCKTON ALTERNATIVE
ACCESS TELECOMMUNICATIONS SYSTEM

NORTHEAST RING

UNDERGROUND ALIGNMENT

FEB 13 1997

ENGINEERING
APPROVED

BY:_____ DATE:_____

UNIVERSAL ENGCO, INC.
5118 S. 85th. E. AVE.
TULSA, OK 74145-8115
(918) 622-8330
FAX 918-664-8150

BROOKS FIBER COMMUNICATIONS

FILE INFO: TYPCOVER 1=1 12/12/1996 11:29 MRC

EXHIBIT "B"

CALIFORNIA ONE CALL SYSTEM

(800) 642-2444

CITY OF STOCKTON UTILITY CONTACTS

STOCKTON WATER & WASTEWATER UTILITIES
STOCKTON, CALIFORNIA
(209) 937-8341
(209) 937-8701

PACIFIC GAS & ELECTRIC COMPANY
STOCKTON, CALIFORNIA
(800) 642-2444

PACIFIC BELL TELEPHONE COMPANY
SAN FRANCISCO, CALIFORNIA
(415) 542-9000

PACIFIC BELL TELEPHONE - CABLE LOCATES
(800) 642-2444

CONTINENTAL CABLEVISION
STOCKTON, CALIFORNIA
(209) 473-1800

COUNTRY CLUB SANITARY DISTRICT
STOCKTON, CALIFORNIA
(209) 931-1844

EAST BAY MUNICIPAL UTILITY DISTRCT
STOCKTON, CALIFORNIA
(209) 463-2463

CITY OF STOCKTON ENGINEERING CONTACTS

BOB BROTHERS
STOCKTON PUBLIC WORKS SR. ENGINEER
(209) 937-8374

CITY ENGINEER'S OFFICE
PUBLIC WORKS DEPARTMENT
(209) 937-8486

PERMITS
PUBLIC WORKS DEPARTMENT
(209) 937-8366

UTILITY LOCATES
PUBLIC WORKS DEPARTMENT
(209) 937-8366

CONSTRUCTION INSPECTION
PUBLIC WORKS DEPARTMENT
(209) 937-8279

TRAFFIC ENGINEER
PUBLIC WORKS DEPARTMENT
(209) 937-8282

CAL-TRANS STATE RIGHT OF WAY
PUBLIC WORKS DEPARTMENT
(209) 948-7820

MUNICIPAL UTILITIES
COMMUNITY DEVELOPMENT DEPARTMENT
(209) 937-8436

EMERGENCY CONTACTS

AMBULANCE SERVICE OF STOCKTON
911 (EMERGENCY)
(209) 948-6056 (ALL OTHERS)

STOCKTON FIRE DEPARTMENT
911 (EMERGENCY)
(209) 464-4646 (ALL OTHERS)

STOCKTON POLICE DEPARTMENT
911 (EMERGENCY)
(209) 937-7911 (ALL OTHERS)

SAN JOAQUIN COUNTY SHERIFF
(209) 468-4421

BROOKS FIBER COMMUNICATIONS

INFORMATION IN THIS DOCUMENT IS PROPRIETARY AND SHALL NOT BE USED, COPIED, REPRODUCED OR DISCLOSED IN WHOLE OR IN PART WITHOUT WRITTEN CONSENT OF BROOKS FIBER COMMUNICATIONS.

TITLE: ALTERNATIVE ACCESS TELECOMMUNICATIONS SYSTEM

UTILITY CONTACT SHEET

UNIVERSAL ENGCO, INC.
5116 S. 85th. E. AVE.
TULSA, OK 74145-8115
(918) 622-8330
FAX 918-664-6150

FILE INFO: CONT_CA 1=1 11/01/1996 14:38 AJB

EXHIBIT "A"

GENERAL NOTES

1. THE CONTRACTOR SHALL BE RESPONSIBLE FOR THE PROTECTION AND MAINTENANCE OF PUBLIC AND PRIVATE PROPERTIES. HE SHALL PROTECT, SHORE, BRACE, SUPPORT AND MAINTAIN ALL UNDERGROUND PIPES, CONDUITS, DRAINS AND OTHER UNDERGROUND CONSTRUCTION UNCOVERED OR OTHERWISE AFFECTED BY THE CONSTRUCTION WORK PERFORMED BY HIM.

2. CERTAIN PIPE LINES, SEWERS, CULVERTS, DRAINS, CABLES AND OTHER EXISTING SUBSURFACE STRUCTURES IN THE VICINITY OF THE WORK TO BE DONE ARE INDICATED ON THE PLANS ACCORDING TO THE BEST INFORMATION AVAILABLE TO THE SURVEY CREW. HOWEVER, THERE IS NO GUARANTEE OF ACCURACY OF SUCH INFORMATION AND ANY DAMAGE TO SUBSURFACE STRUCTURES OR DELAY TO THE CONTRACTOR DUE TO ENCOUNTERING STRUCTURES, CABLES OR PIPE LINES NOT SHOWN OR IN LOCATIONS DIFFERENT FROM THOSE INDICATED ON THE PLANS SHALL BE THE SOLE RESPONSIBILITY OF THE CONTRACTOR AND SHALL NOT CONSTITUTE A CLAIM FOR ADDITIONAL PAYMENT.

3. THE CONTRACTOR SHALL BE RESPONSIBLE FOR ALL DAMAGE TO STREETS, CURBS, ROADS, HIGHWAYS, SHOULDERS, DITCHES, EMBANKMENTS, CULVERTS, STORE DRAINS, BRIDGES OR OTHER PUBLIC OR PRIVATE PROPERTY OR FACILITY, REGARDLESS OF LOCATION OR CHARACTER, WHICH MAY BE CAUSED BY MOVING, HAULING OR OTHERWISE TRANSPORTING EQUIPMENT, MATERIALS OR MEN TO OR FROM THE WORK OF ANY SITE THEREOF, WHETHER BY HIM OR HIS SUBCONTRACTOR OR SUBCONTRACTORS.

4. EXTREME CARE SHALL BE EXERCISED TO AVOID HITTING OR CAUSING DAMAGE TO SUBSURFACE OBSTRUCTIONS. OWNERS OF SUBSURFACE STRUCTURES WILL BE NOTIFIED IN ADVANCE OF EXCAVATION WORK BY THE CONTRACTOR AND A REQUEST WILL BE MADE TO LOCATE THE AFFECTED PLANT. THE PROPOSED CONDUIT MAY BE PLACED ABOVE OR BELOW THE FOREIGN PLANT DEPENDING ON THE DEPTH OF THAT PLANT AND THE REQUIRED DEPTH OF THE PROPOSED PLANT. ALSO, A MINIMUM SEPARATION OF ONE (1) FOOT BETWEEN THE PROPOSED CONDUIT AND FOREIGN PLANT SHALL BE MAINTAINED. EXTRA TRENCH DEPTH MAY BE REQUIRED TO SATISFY THE ABOVE CONDITIONS.

5. THE CONTRACTOR SHALL MAKE, WITHOUT DELAY, SATISFACTORY AND ACCEPTABLE ARRANGEMENTS WITH THE AGENCY OR AUTHORITY HAVING JURISDICTION OVER THE DAMAGED PROPERTY, SURFACE, STRUCTURE OR FACILITY CONCERNING ITS REPAIR OR REPLACEMENT OR PAYMENT OF COSTS INCURRED IN CONNECTION WITH SAID DAMAGE.

6. UTILITY CONTACT: SEE EXHIBIT "B" – UTILITY CONTACTS

7. THE CONTRACTOR SHALL CLEAR BRUSH OR TREES UNDER THE FOLLOWING CONDITIONS: (1) WHEN BRUSH CLEARING IS SPECIFIED ON CONSTRUCTION DRAWINGS, AND (2) WHEN BRUSH IMPEDES PLACING OF CABLE ALONG ROUTE.

8. ALL BRUSH AND DEBRIS WILL BE REMOVED FROM THE RIGHT-OF-WAY AT SOLE EXPENSE OF THE CONTRACTOR.

9. EVERY EFFORT WILL BE MADE BY THE CONTRACTOR TO AVOID DAMAGE TO ORNAMENTAL SHUBBERY OR TREES ON PUBLIC OR PRIVATE RIGHT-OF-WAYS. DAMAGE IS THE SOLE EXPENSE OF THE CONTRACTOR.

CONVENTIONAL SYMBOLS

WATER METER
GAS METER
STREET LIGHT
POWER POLE
POWER POLE W/ANCHOR
TELEPHONE POLE
JOINT POLE
TELEPHONE POLE WITH ATTACHMENTS
TELEPHONE MANHOLE
GAS VALVE
WATER VALVE
TRAFFIC CONTROL BOX
STREET, HIGHWAY, ETC. SIGN
GUARD RAIL
GATE
IRON PIN FOUND (IPF) OR R/W MARKER
SHRUB
TREE
STORM SEWER MANHOLE
SANITARY SEWER MANHOLE
GAS MANHOLE
ELECTRICAL MANHOLE
WATER MANHOLE
FIRE HYDRANT
DROP INLET
TELEPHONE PEDESTAL
ELECTRICAL BOX
EDGE OF PAVEMENT — EOP
FACE OF CURB — CURB
TRAFFIC DIRECTION
TRAFFIC DIRECTION

LINE TYPES

PROPOSED 4" CONDUIT W/HDPE INNERDUCTS
PROPOSED 4" STEEL PIPE W/HDPE INNERDUCTS
BEGIN/END OF BORE
BARBED WIRE FENCE
CHAIN-LINKED FENCE
RAILROAD
CENTERLINE
PROPERTY LINE
RIGHT-OF-WAY — R/W
DITCH
HIGH BANK
SECTION LINE

UNDERGROUND UTILITIES

ELECTRIC — BP
TV — BC
TELEPHONE — BT
FIBER OPTIC CABLE — FO
GAS — G
WATER — W
STORM SEWER — ST
SANITARY SEWER — SS
TRAFFIC SIGNAL — TS
FIRE ALARM — FA
FOREIGN PIPELINE

OVERHEAD UTILITIES

ELECTRIC — P
TV — C
TELEPHONE — T

ENGINEERING SYMBOLS

PROPOSED MANHOLE
PROPOSED HANDHOLE
CABLE MARKER
CABLE MARKER
SPLICE

UNIVERSAL ENGCO, INC.
5116 S. 85th. E. AVE.
TULSA, OK 74145-8115
(918) 622-8330
FAX 918-664-8150

BROOKS FIBER COMMUNICATIONS

INFORMATION IN THIS DOCUMENT IS PROPRIETARY AND SHALL NOT BE USED, COPIED, REPRODUCED OR DISCLOSED IN WHOLE OR IN PART WITHOUT WRITTEN CONSENT OF BROOKS FIBER COMMUNICATIONS.

TITLE: ALTERNATIVE ACCESS TELECOMMUNICATIONS SYSTEM

GENERAL NOTES AND DRAWING SYMBOLS

FILE INFO: DWGSYMS 1=1 11/04/1996 07:23 AJB

SAN JOAQUIN COUNTY, CALIFORNIA

SECTION 16, T2N R6E

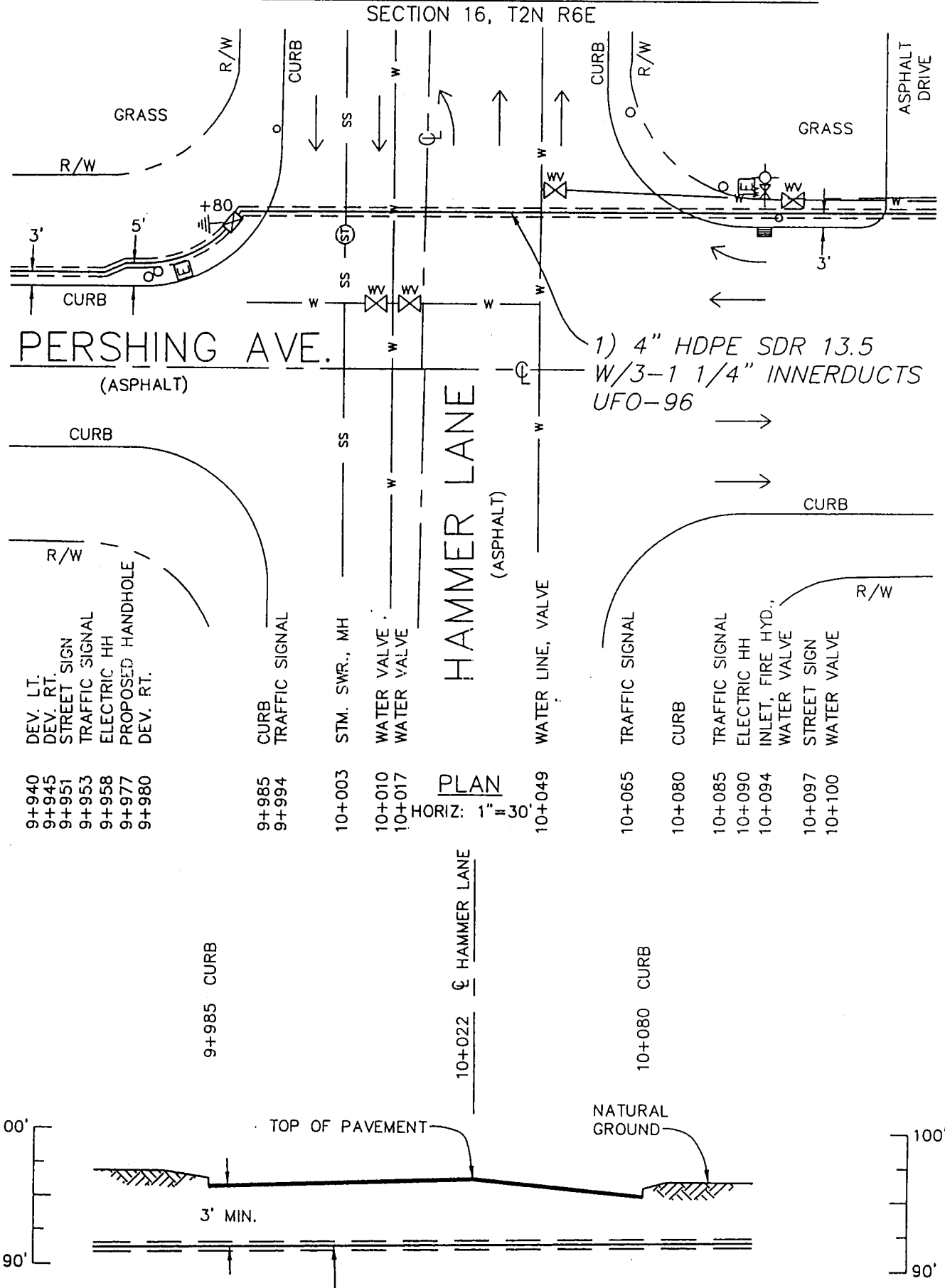

ELEVATION

(LOOKING NORTH)

SCALE: HORIZ: 1"=30'
VERT: 1"=10'

METHOD OF CROSSING: DIRECTIONAL BORE

T.B.M.
TOP OF FIRE HYDRANT
8' LT. OF STA. 10+094.
ASSUMED ELEVATION: 100.00'

BROOKS FIBER COMMUNICATIONS OF STOCKTON, CA, INC.

INFORMATION IN THIS DOCUMENT IS PROPRIETARY AND SHALL NOT BE USED, COPIED, REPRODUCED OR DISCLOSED IN WHOLE OR IN PART WITHOUT WRITTEN CONSENT OF BROOKS FIBER COMMUNICATIONS.

TITLE: STOCKTON ALTERNATIVE ACCESS TELECOMMUNICATIONS SYSTEM
NORTHEAST RING
HAMMER LANE CROSSING @ PERSHING AVENUE

DRAWING NO.:	SHEET:	DATE:	11/25/96
BRK-2882AL-7002	1 OF 1	ORIGIN:	UNIVERSAL ENSCO, INC.

UNIVERSAL ENSCO, INC.
5118 S. 85th. E. AVE.
TULSA, OK 74145-8115
(918) 622-8330
FAX 918-664-8150

FILE INFO: S827002_ 1=30 11/26/1996 12:13 AJB

SAN JOAQUIN COUNTY, CALIFORNIA

N

8+678
TRENCH AND RESTORE GRASS APPROX. 3' FROM CURB FACE.

8+657
64'
PLACE 1 4" HDPE SDR 13.5

W/3-1 1/4" INNERDUCT

8+657
DIRECTIONAL BORE GRASS APPROX. 5' FROM CURB FACE.

R/W

R/W

R/W

R/W

CURB

CURB

CURB

CURB

CURB

℄

℄

℄

℄

SEE SHEET 26

THORNTON ROAD (ASPHALT)

EL CAMINO AVENUE (ASPHALT)

1) 4" HDPE SDR 13.5
W/3-1 1/4" INNERDUCTS
UFO-96

ST

W

ST

W

ST

W

3'

5'

8+678 DEV. LT.
8+674 STREET LIGHT
8+669 FIRE HYD.
8+666 WTR. VALVE
8+665 INLET

SEE SHEET 24

TAB	
MH=	0
HH=	0
1) 4" PVC SCH. 40=	0'
1) 4" HDPE SDR 13.5=	64'
3 1 1/4" DUCT=	64'
4" 45° SWEEP=	0
UFO-96=	64'
TRACE WIRE=	64'
GRD ROD=	0
COYOTE CLOSURE= KIT (#8006560)	0

SCALE - 1"=50'

CONTRACTOR IS RESPONSIBLE FOR ALL TRAFFIC SIGNAGE & TRAFFIC CONTROL IN ACCORDANCE WITH CITY AND STATE REGULATIONS.

PLACE CONDUIT AT A MINIMUM DEPTH OF 36"

CAUTION
LOCATE ALL UTILITIES PRIOR TO CONSTRUCTION

CAUTION:
UTILITY LOCATIONS ARE APPROX. AND ARE NOT TO BE TAKEN AS EXACT. BROOKS FIBER COMMUNICATIONS IS NOT RESPONSIBLE FOR LOCATES.

Contractor's Note:
The Locations Of Underground Facilities Shown Are Approximate. The Contractor Is Responsible For The Location And Preservation Of All Underground Utilities And Other Facilities Whether Shown Or Not Shown On These Drawings.

BROOKS FIBER COMMUNICATIONS OF STOCKTON, CA, INC.

INFORMATION IN THIS DOCUMENT IS PROPRIETARY AND SHALL NOT BE USED, COPIED, REPRODUCED OR DISCLOSED IN WHOLE OR IN PART WITHOUT WRITTEN CONSENT OF BROOKS FIBER COMMUNICATIONS.

STOCKTON, CA
EXCHANGE

UNIVERSAL
5118 S. 85th. E. AVE.
TULSA, OK 74145-8115
(918) 622-8330
FAX 918-664-8150

DATE: 11/11/96
REVISED:
MAP NO.: S821125_

FILE INFO: S821125_ 1=50 01/08/1997 13:09 RCD

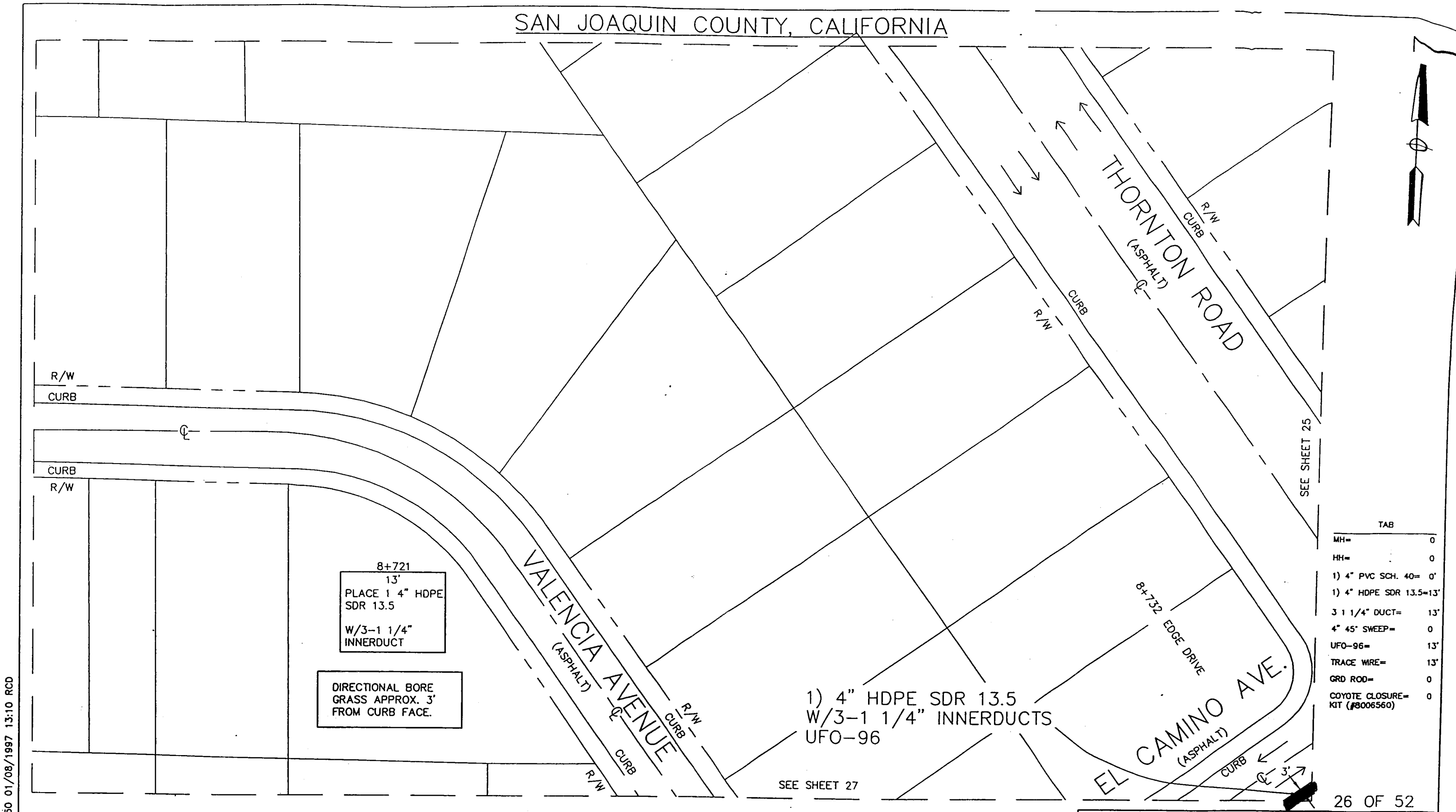

CONTRACTOR IS RESPONSIBLE FOR ALL TRAFFIC SIGNAGE & TRAFFIC CONTROL IN ACCORDANCE WITH CITY AND STATE REGULATIONS.

PLACE CONDUIT AT A MINIMUM DEPTH OF 36"

CAUTION
LOCATE ALL UTILITIES PRIOR TO CONSTRUCTION

CAUTION:
UTILITY LOCATIONS ARE APPROX. AND ARE NOT TO BE TAKEN AS EXACT. BROOKS FIBER COMMUNICATIONS IS NOT RESPONSIBLE FOR LOCATES.

Contractor's Note:
The Locations Of Underground Facilities Shown Are Approximate. The Contractor Is Responsible For The Location And Preservation Of All Underground Utilities And Other Facilities Whether Shown Or Not Shown On These Drawings.

BROOKS FIBER COMMUNICATIONS OF STOCKTON, CA, INC.

INFORMATION IN THIS DOCUMENT IS PROPRIETARY AND SHALL NOT BE USED, COPIED, REPRODUCED OR DISCLOSED IN WHOLE OR IN PART WITHOUT WRITTEN CONSENT OF BROOKS FIBER COMMUNICATIONS.

STOCKTON, CA
EXCHANGE

UNIVERSAL
5118 S. 85th. E. AVE.
TULSA, OK 74145-8115
(918) 622-8330
FAX 918-664-6150

DATE: 11/13/96
REVISED:
MAP NO.: S821126__

FILE INFO: S821126_ 1=50 01/08/1997 13:10 RCD

SAN JOAQUIN COUNTY, CALIFORNIA

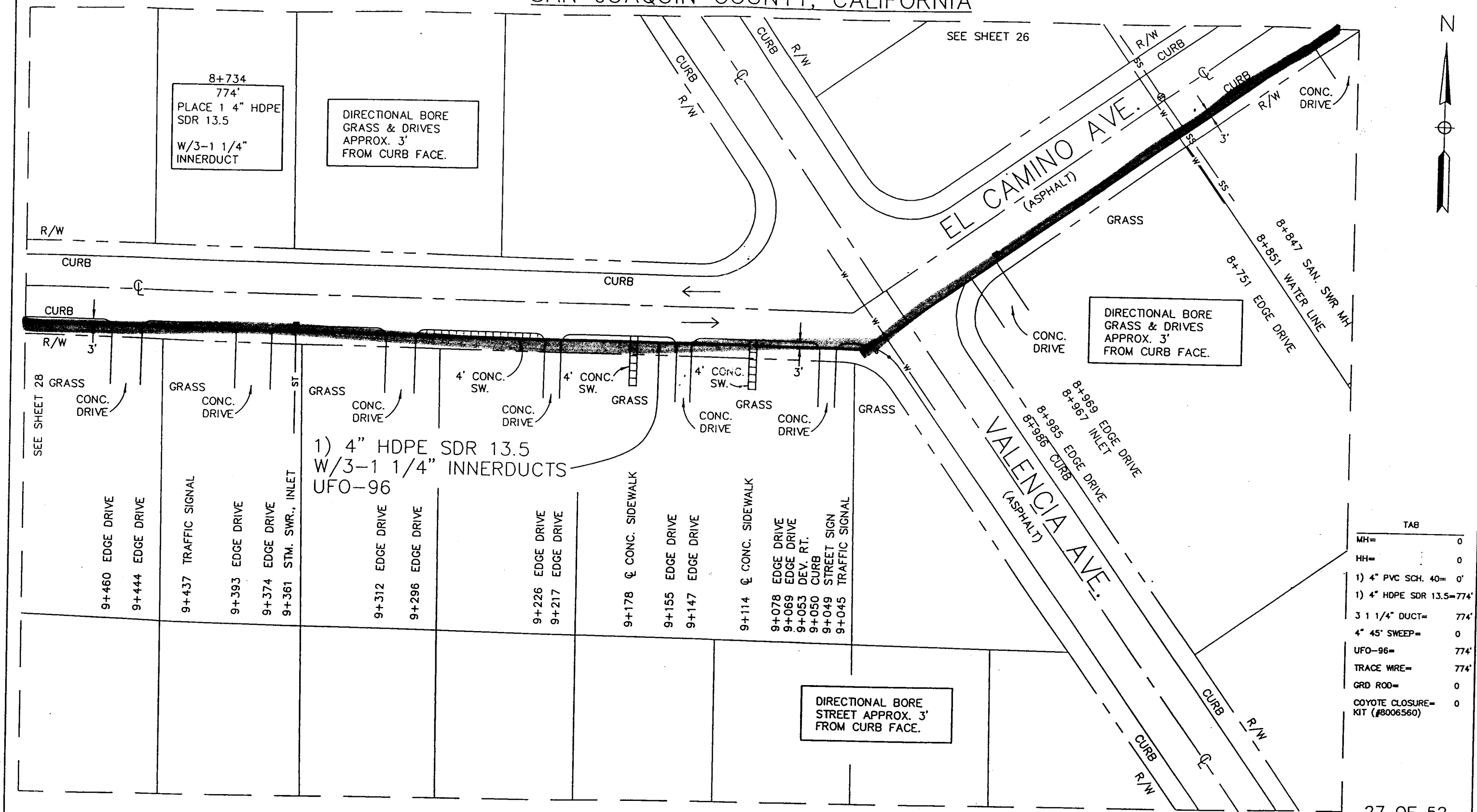

TAB	
MH=	0
HH=	0
1) 4" PVC SCH. 40=	0'
1) 4" HDPE SDR 13.5=	774'
3 1 1/4" DUCT=	774'
4" 45° SWEEP=	0
UFO-96=	774'
TRACE WIRE=	774'
GRD ROD=	0
COYOTE CLOSURE= KIT (#8006560)	0

SCALE – 1"=50'

CONTRACTOR IS RESPONSIBLE FOR ALL TRAFFIC SIGNAGE & TRAFFIC CONTROL IN ACCORDANCE WITH CITY AND STATE REGULATIONS.

PLACE CONDUIT AT A MINIMUM DEPTH OF 36"

CAUTION
LOCATE ALL UTILITIES PRIOR TO CONSTRUCTION

CAUTION:
UTILITY LOCATIONS ARE APPROX. AND ARE NOT TO BE TAKEN AS EXACT. BROOKS FIBER COMMUNICATIONS IS NOT RESPONSIBLE FOR LOCATES.

Contractor's Note:
The Locations Of Underground Facilities Shown Are Approximate. The Contractor Is Responsible For The Location And Preservation Of All Underground Utilities And Other Facilities Whether Shown Or Not Shown On These Drawings.

BROOKS FIBER COMMUNICATIONS OF STOCKTON, CA, INC.

INFORMATION IN THIS DOCUMENT IS PROPRIETARY AND SHALL NOT BE USED, COPIED, REPRODUCED OR DISCLOSED IN WHOLE OR IN PART WITHOUT WRITTEN CONSENT OF BROOKS FIBER COMMUNICATIONS.

STOCKTON, CA EXCHANGE

UNIVERSAL ENGR.
5118 S. 95th. E. AVE.
TULSA, OK 74145-8115
(918) 622-8330
FAX 918-664-8150

DATE: 11/14/96
REVISED:
MAP NO.: S821127_

FILE INFO: S821127_ 1=50 01/08/1997 13:14 RCD

SAN JOAQUIN COUNTY, CALIFORNIA

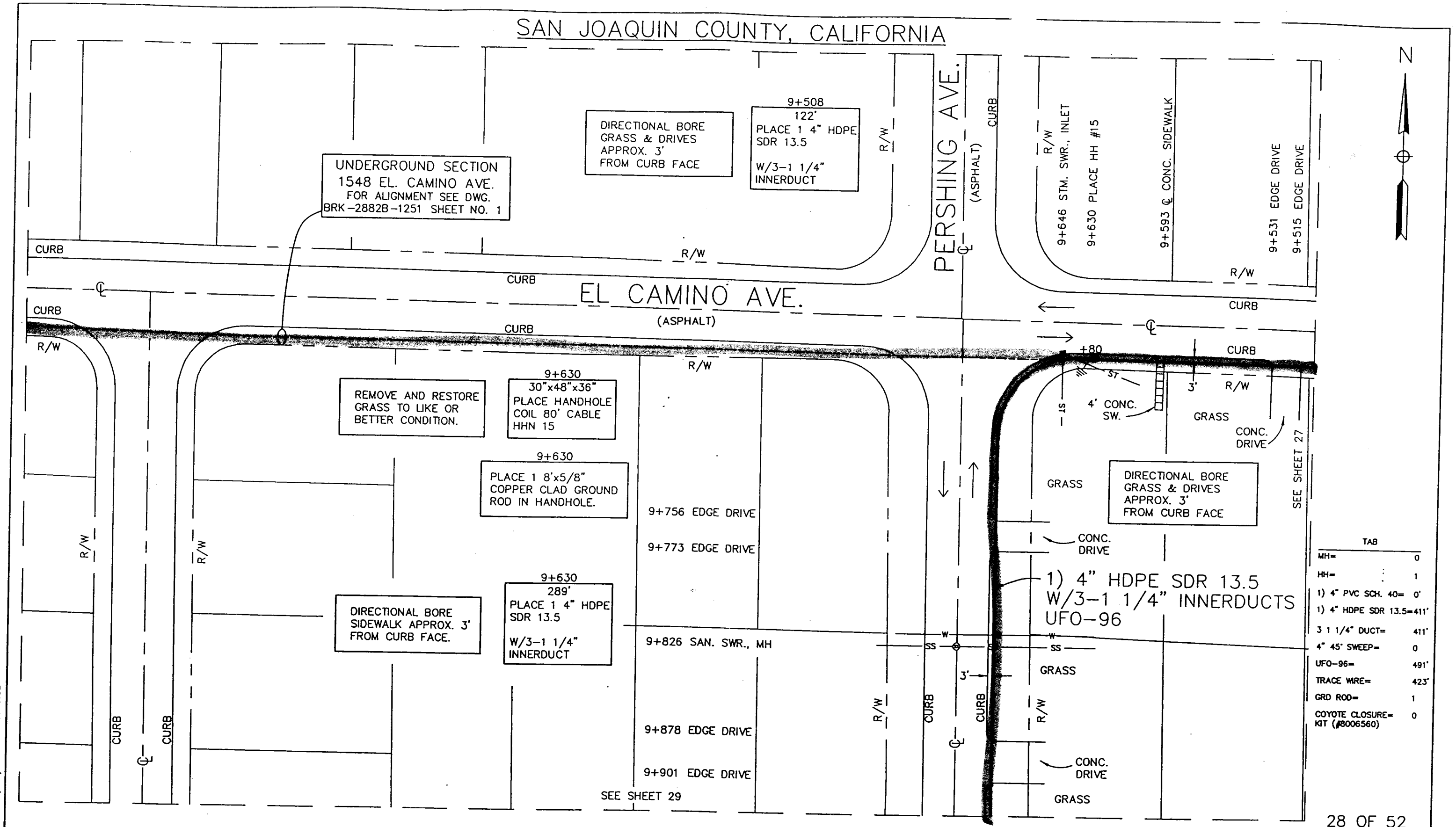

28 OF 52

SCALE – 1"=50'

CONTRACTOR IS RESPONSIBLE FOR ALL TRAFFIC SIGNAGE & TRAFFIC CONTROL IN ACCORDANCE WITH CITY AND STATE REGULATIONS.

PLACE CONDUIT AT A MINIMUM DEPTH OF 36"

CAUTION
LOCATE ALL UTILITIES
PRIOR TO CONSTRUCTION

CAUTION:
UTILITY LOCATIONS ARE APPROX. AND ARE NOT TO BE TAKEN AS EXACT. BROOKS FIBER COMMUNICATIONS IS NOT RESPONSIBLE FOR LOCATES.

BROOKS FIBER COMMUNICATIONS OF STOCKTON, CA, INC.

INFORMATION IN THIS DOCUMENT IS PROPRIETARY AND SHALL NOT BE USED, COPIED, REPRODUCED OR DISCLOSED IN WHOLE OR IN PART WITHOUT WRITTEN CONSENT OF BROOKS FIBER COMMUNICATIONS.

STOCKTON, CA
EXCHANGE

UNIVERSAL
5118 S. 85th. E. AVE.
TULSA, OK 74145-8115
(918) 622-6330
FAX 918-664-6150

DATE: 11/14/96
REVISED:
MAP NO.: S821128_

Contractor's Note:
The Locations Of Underground Facilities Shown Are Approximate. The Contractor Is Responsible For The Location And Preservation Of All Underground Utilities And Other Facilities Whether Shown Or Not Shown On These Drawings.

FILE INFO: S821128_ 1=50 01/08/1997 13:17 RCD

SAN JOAQUIN COUNTY, CALIFORNIA

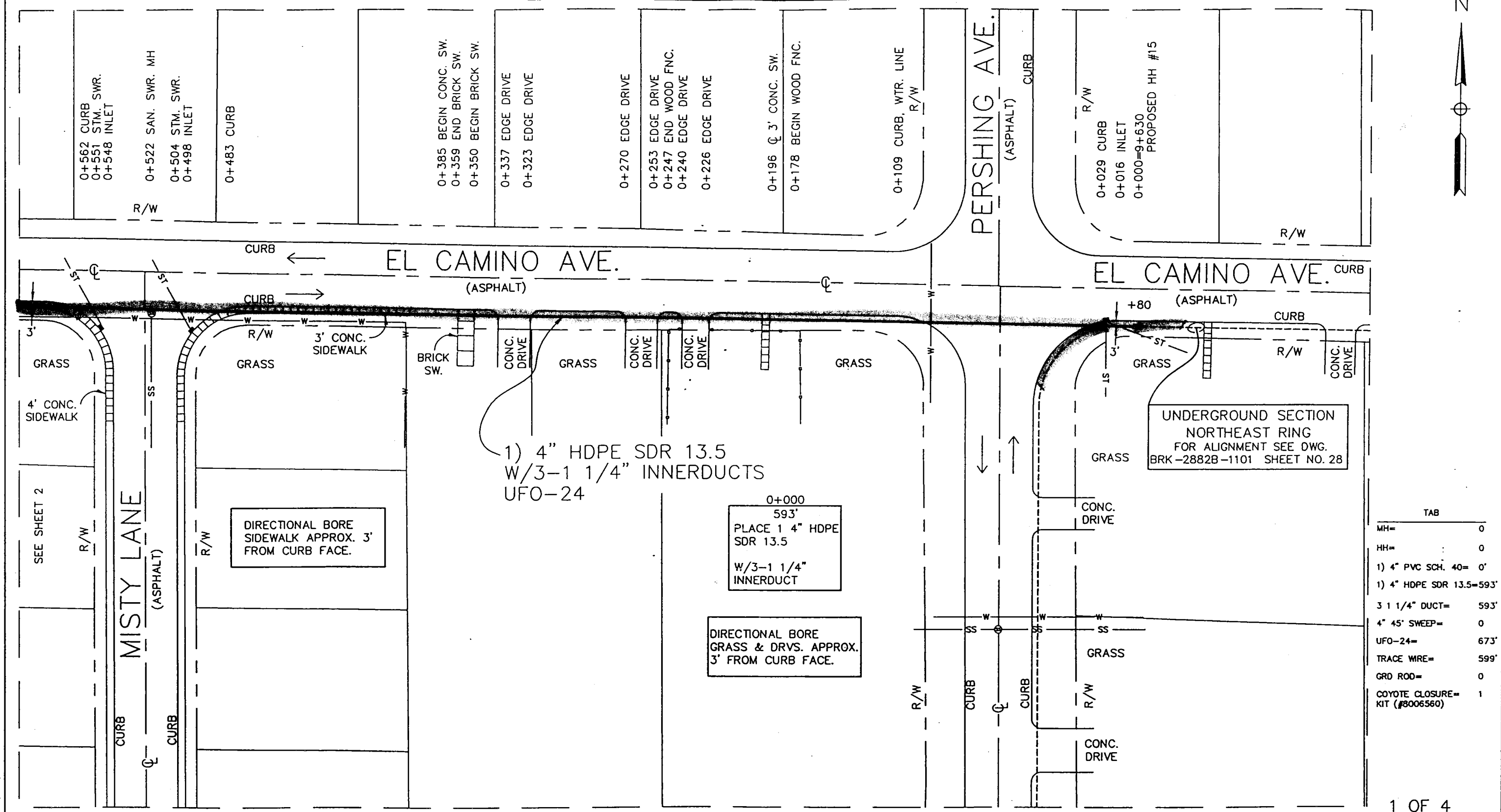

TAB	
MH=	0
HH=	0
1) 4" PVC SCH. 40=	0'
1) 4" HDPE SDR 13.5=	593'
3 1 1/4" DUCT=	593'
4" 45° SWEEP=	0
UFO-24=	673'
TRACE WIRE=	599'
GRD ROD=	0
COYOTE CLOSURE= KIT (#8006560)	1

1 OF 4

SCALE – 1"=50'

CONTRACTOR IS RESPONSIBLE FOR ALL TRAFFIC SIGNAGE & TRAFFIC CONTROL IN ACCORDANCE WITH CITY AND STATE REGULATIONS.

PLACE CONDUIT AT A MINIMUM DEPTH OF 36"

CAUTION
LOCATE ALL UTILITIES PRIOR TO CONSTRUCTION

CAUTION:
UTILITY LOCATIONS ARE APPROX. AND ARE NOT TO BE TAKEN AS EXACT. BROOKS FIBER COMMUNICATIONS IS NOT RESPONSIBLE FOR LOCATES.

Contractor's Note:
The Locations Of Underground Facilities Shown Are Approximate. The Contractor Is Responsible For The Location And Preservation Of All Underground Utilities And Other Facilities Whether Shown Or Not Shown On These Drawings.

BROOKS FIBER COMMUNICATIONS OF STOCKTON, CA, INC.

INFORMATION IN THIS DOCUMENT IS PROPRIETARY AND SHALL NOT BE USED, COPIED, REPRODUCED OR DISCLOSED IN WHOLE OR IN PART WITHOUT WRITTEN CONSENT OF BROOKS FIBER COMMUNICATIONS.

STOCKTON, CA EXCHANGE

UNIVERSAL
9118 S. 95th. E. AVE.
TULSA, OK 74145-8115
(918) 622-6330
FAX 918-664-6150

DATE: 11/19/96
REVISED:
MAP NO.: S821251_

FILE INFO: S821251_ 1=50 01/10/1997 09:40 AJB

SAN JOAQUIN COUNTY, CALIFORNIA

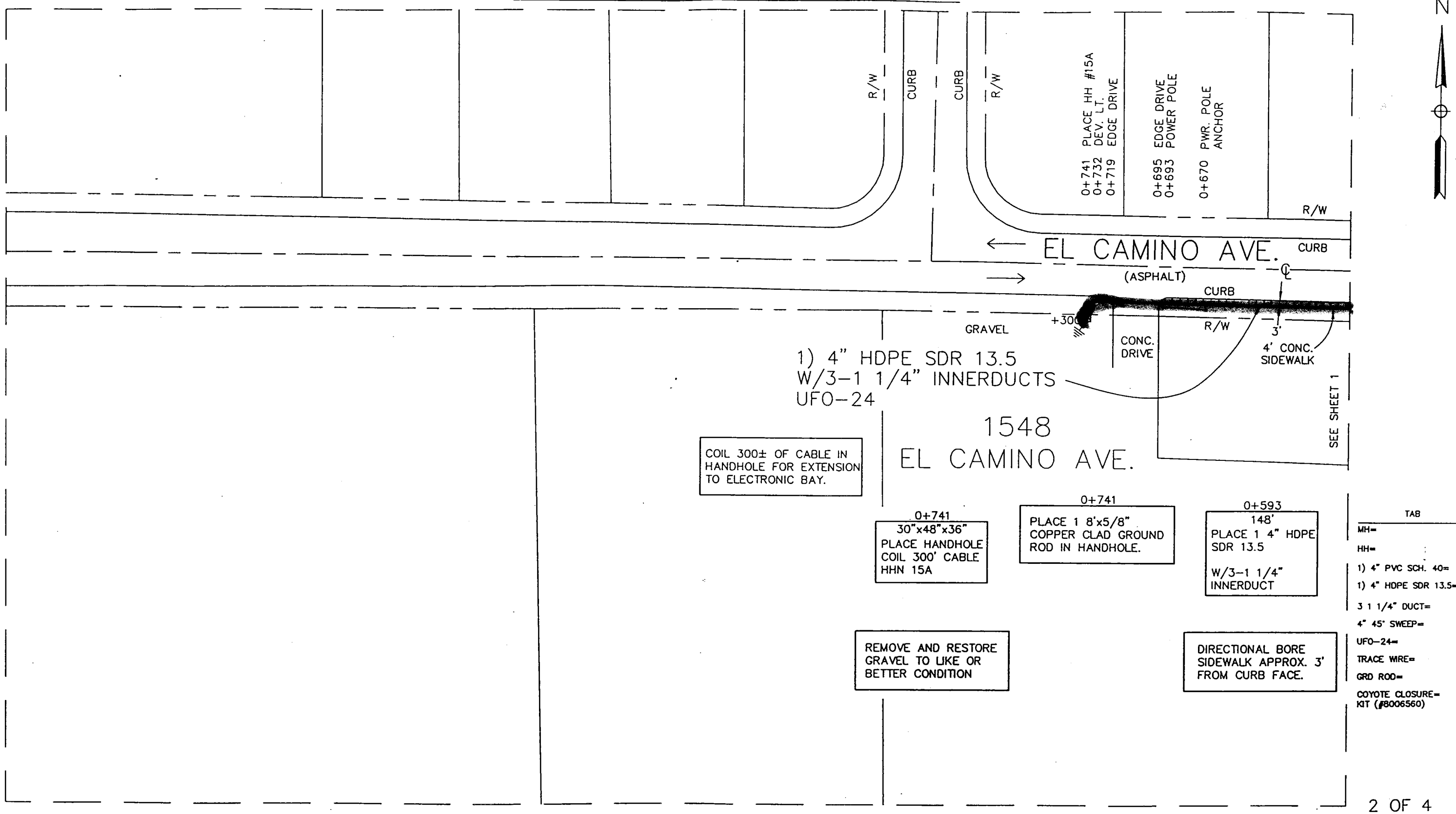

TAB	
MH=	0
HH=	1
1) 4" PVC SCH. 40=	0'
1) 4" HDPE SDR 13.5=	148'
3 1 1/4" DUCT=	148'
4" 45° SWEEP=	0
UFO-24=	448'
TRACE WIRE=	154'
GRD ROD=	1
COYOTE CLOSURE= KIT (#8006560)	0

SCALE – 1"=50'

CONTRACTOR IS RESPONSIBLE FOR ALL TRAFFIC SIGNAGE & TRAFFIC CONTROL IN ACCORDANCE WITH CITY AND STATE REGULATIONS.

PLACE CONDUIT AT A MINIMUM DEPTH OF 36"

CAUTION
LOCATE ALL UTILITIES PRIOR TO CONSTRUCTION

CAUTION:
UTILITY LOCATIONS ARE APPROX. AND ARE NOT TO BE TAKEN AS EXACT. BROOKS FIBER COMMUNICATIONS IS NOT RESPONSIBLE FOR LOCATES.

Contractor's Note:
The Locations Of Underground Facilities Shown Are Approximate. The Contractor Is Responsible For The Location And Preservation Of All Underground Utilities And Other Facilities Whether Shown Or Not Shown On These Drawings.

BROOKS FIBER COMMUNICATIONS OF STOCKTON, CA, INC.

INFORMATION IN THIS DOCUMENT IS PROPRIETARY AND SHALL NOT BE USED, COPIED, REPRODUCED OR DISCLOSED IN WHOLE OR IN PART WITHOUT WRITTEN CONSENT OF BROOKS FIBER COMMUNICATIONS.

STOCKTON, CA EXCHANGE

UNIVERSAL Engineering Sciences, Inc.
5118 S. 85th. E. AVE.
TULSA, OK 74145-8115
(918) 622-8330
FAX 918-664-8150

DATE: 11/19/96

REVISED:

MAP NO.: S821252_

FILE INFO: S821252_ 1=50 01/08/1997 16:27 RCD

SAN JOAQUIN COUNTY, CALIFORNIA

N

DIRECTIONAL BORE
GRASS APRROX. 3' &
5' FROM CURB FACE

SEE SHEET 28

R/W

CURB

UNDERGROUND SECTION
1548 EL. CAMINO AVE.
FOR ALIGNMENT SEE DWG.
BRK-2882B-1251 SHEET NO. 3

HAMMER LANE
(ASPHALT)

9+940 DEV. LT.
9+945 DEV. RT.
9+951 STREET SIGN
9+953 TRAFFIC SIGNAL
9+958 ELECTRIC HH
9+977 PLACE HH #16
9+980 DEV. RT.
9+985 CURB

GRASS

9+919
58'
PLACE 1 4" HDPE
SDR 13.5

W/3-1 1/4"
INNERDUCT

9+977
30"x48"x36"
PLACE HANDHOLE
COIL 80' CABLE
HHN 16

REMOVE AND RESTORE
GRASS TO LIKE OR
BETTER CONDITION.

9+977
PLACE 1 8'x5/8"
COPPER CLAD GROUND
ROD WITH 6' #6 GRD

1) 4" HDPE SDR 13.5
W/3-1 1/4" INNERDUCTS
UFO-96

9+977
387'
PLACE 1 4" HDPE
SDR 13.5

W/3-1 1/4"
INNERDUCT

DIRECTIONAL BORE
STREET APPROX. 3'
FROM EXT. CURB FACE.

DIRECTIONAL BORE
GRASS & DRIVES
APPROX. 3' FROM EOP.

PERSHING AVE.
(ASPHALT)

EOP

9+994 TRAFFIC SIGNAL
10+003 STM. SWR. LINE, MH
10+010 WATER VALVE
10+017 WATER VALVE
10+049 WATER LINE, VALVE
10+065 TRAFFIC SIGNAL
10+080 CURB
10+085 TRAFFIC SIGNAL
10+090 ELECTRIC HH
10+094 INLET, WTR. VLV.,
FIRE HYDRANT
10+097 STREET SIGN
10+100 WATER VALVE
10+120 EDGE DRIVE
10+143 EDGE DRIVE

ASPHALT
DRIVE

10+202 EDGE DRIVE

ASPHALT
DRIVE

10+228 EDGE DRIVE

10+290 TRAFFIC SIGN
10+298 INLET
10+302 STM. LINE
10+303 DEV. RT.
10+310 CURB

JOAN CARAN AVE.
(ASPHALT)

EOP

DIRT

10+358 POWER POLE
10+361 EDGE PAVEMENT

SEE SHEET 30

TAB	
MH=	0
HH=	1
1) 4" PVC SCH. 40=	0'
1) 4" HDPE SDR 13.5=	445'
3 1 1/4" DUCT=	445'
4" 45' SWEEP=	0
UFO-96=	525'
TRACE WIRE=	457'
GRD ROD=	1
COYOTE CLOSURE= KIT (#8006560)	0

SCALE - 1"=50'

CONTRACTOR IS RESPONSIBLE FOR ALL TRAFFIC SIGNAGE & TRAFFIC CONTROL IN ACCORDANCE WITH CITY AND STATE REGULATIONS.

PLACE CONDUIT AT A MINIMUM DEPTH OF 36"

CAUTION
LOCATE ALL UTILITIES
PRIOR TO CONSTRUCTION

CAUTION:
UTILITY LOCATIONS ARE
APPROX. AND ARE NOT
TO BE TAKEN AS EXACT.
BROOKS FIBER COMMUNICATIONS
IS NOT RESPONSIBLE FOR
LOCATES.

Contractor's Note:
The Locations Of Underground Facilities Shown Are Approximate. The Contractor Is Responsible For The Location And Preservation Of All Underground Utilities And Other Facilities Whether Shown Or Not Shown On These Drawings.

BROOKS FIBER COMMUNICATIONS OF STOCKTON, CA, INC.

INFORMATION IN THIS DOCUMENT IS PROPRIETARY AND SHALL NOT BE USED, COPIED, REPRODUCED OR DISCLOSED IN WHOLE OR IN PART WITHOUT WRITTEN CONSENT OF BROOKS FIBER COMMUNICATIONS.

STOCKTON, CA
EXCHANGE

UNIVERSAL
5118 S. 95th. E. AVE.
TULSA, OK 74145-8115
(918) 622-8330
FAX 918-664-8150

DATE: 11/14/96
REVISED:
MAP NO.: S821129_

FILE INFO: S821129_ 1=50 01/08/1997 13:20 RCD

SAN JOAQUIN COUNTY, CALIFORNIA

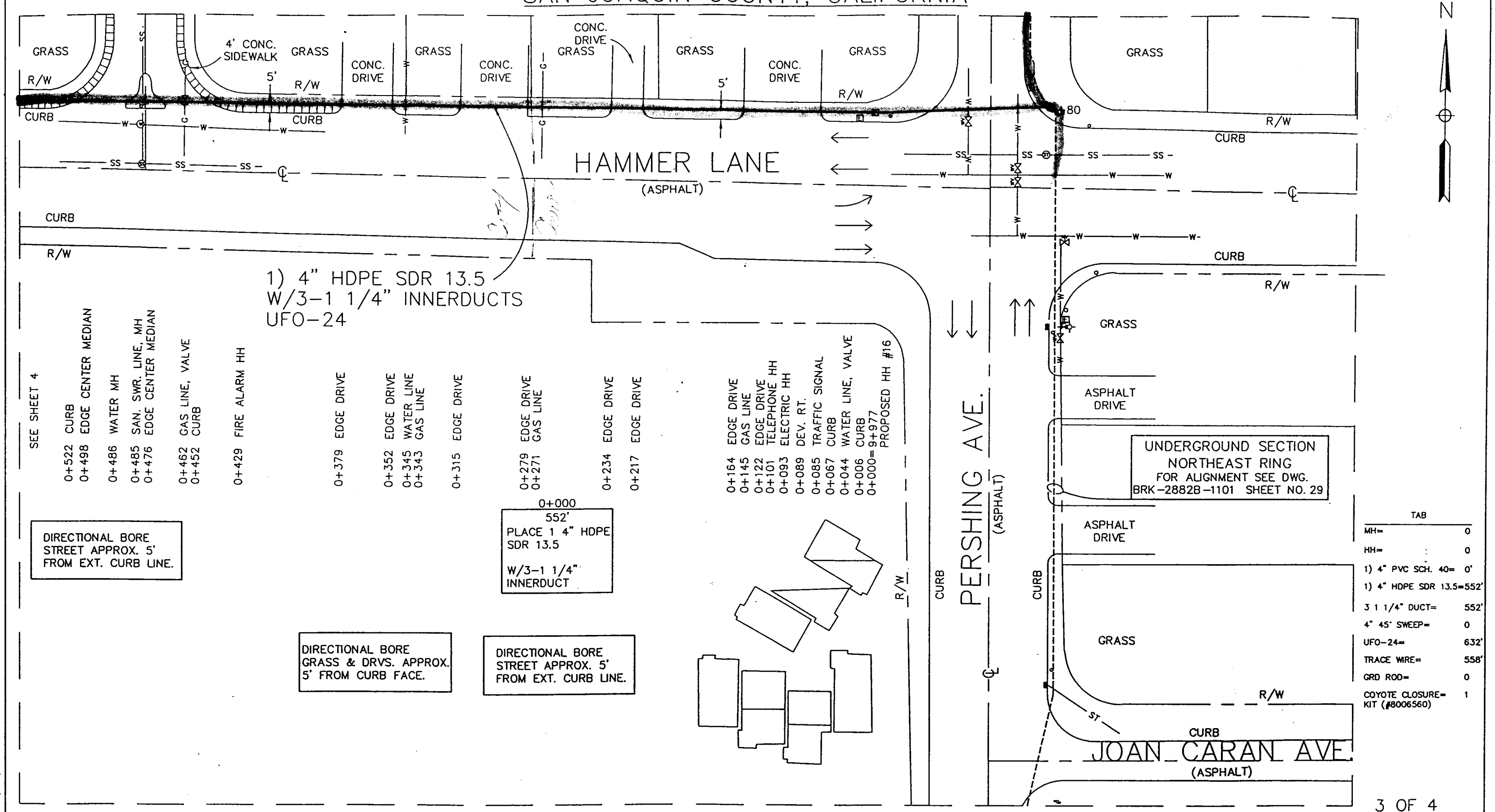

TAB	
MH=	0
HH=	0
1) 4" PVC SCH. 40=	0'
1) 4" HDPE SDR 13.5=	552'
3 1 1/4" DUCT=	552'
4" 45° SWEEP=	0
UFO-24=	632'
TRACE WIRE=	558'
GRD ROD=	0
COYOTE CLOSURE= KIT (#8006560)	1

SCALE – 1"=50'

CONTRACTOR IS RESPONSIBLE FOR ALL TRAFFIC SIGNAGE & TRAFFIC CONTROL IN ACCORDANCE WITH CITY AND STATE REGULATIONS.

PLACE CONDUIT AT A MINIMUM DEPTH OF 36"

CAUTION
LOCATE ALL UTILITIES PRIOR TO CONSTRUCTION

CAUTION:
UTILITY LOCATIONS ARE APPROX. AND ARE NOT TO BE TAKEN AS EXACT. BROOKS FIBER COMMUNICATIONS IS NOT RESPONSIBLE FOR LOCATES.

Contractor's Note

The Locations Of Underground Facilities Shown Are Approximate. The Contractor Is Responsible For The Location And Preservation Of All Underground Utilities And Other Facilities Whether Shown Or Not Shown On These Drawings.

BROOKS FIBER COMMUNICATIONS OF STOCKTON, CA, INC.

INFORMATION IN THIS DOCUMENT IS PROPRIETARY AND SHALL NOT BE USED, COPIED, REPRODUCED OR DISCLOSED IN WHOLE OR IN PART WITHOUT WRITTEN CONSENT OF BROOKS FIBER COMMUNICATIONS.

STOCKTON, CA EXCHANGE

UNIVERSAL

DATE: 11/19/96

REVISED:

MAP NO.: S821253_

FILE INFO: S821253_ 1=50 01/10/1997 09:42 AJB

SAN JOAQUIN COUNTY, CALIFORNIA

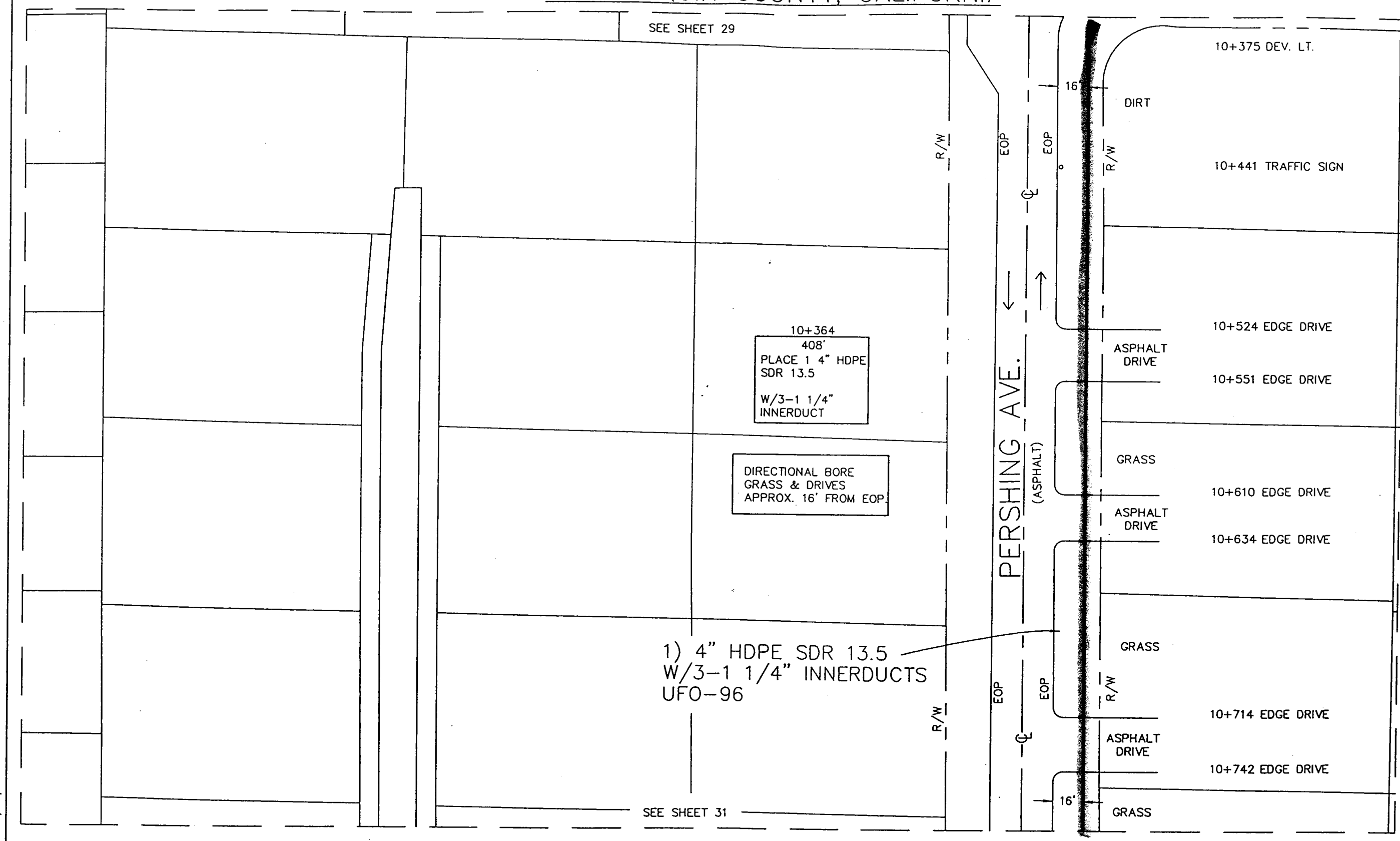

TAB	
MH=	0
HH=	0
1) 4" PVC SCH. 40=	0'
1) 4" HDPE SDR 13.5=	408'
3 1 1/4" DUCT=	408'
4" 45° SWEEP=	0
UFO-96=	408'
TRACE WIRE=	408'
GRD ROD=	0
COYOTE CLOSURE= KIT (#8006560)	0

SCALE – 1"=50'

CONTRACTOR IS RESPONSIBLE FOR ALL TRAFFIC SIGNAGE & TRAFFIC CONTROL IN ACCORDANCE WITH CITY AND STATE REGULATIONS.

PLACE CONDUIT AT A MINIMUM DEPTH OF 36"

CAUTION
LOCATE ALL UTILITIES PRIOR TO CONSTRUCTION

CAUTION:
UTILITY LOCATIONS ARE APPROX. AND ARE NOT TO BE TAKEN AS EXACT. BROOKS FIBER COMMUNICATIONS IS NOT RESPONSIBLE FOR LOCATES.

Contractor's Note:
The Locations Of Underground Facilities Shown Are Approximate. The Contractor Is Responsible For The Location And Preservation Of All Underground Utilities And Other Facilities Whether Shown Or Not Shown On These Drawings.

BROOKS FIBER COMMUNICATIONS OF STOCKTON, CA, INC.

INFORMATION IN THIS DOCUMENT IS PROPRIETARY AND SHALL NOT BE USED, COPIED, REPRODUCED OR DISCLOSED IN WHOLE OR IN PART WITHOUT WRITTEN CONSENT OF BROOKS FIBER COMMUNICATIONS.

STOCKTON, CA EXCHANGE

UNIVERSAL ENGG. INC.
5118 S. 85th. E. AVE.
TULSA, OK 74145-8115
(918) 622-8330
FAX 918-664-6150

DATE: 11/14/96
REVISED:
MAP NO.: S821130_

FILE INFO: S821130_ 1=50 01/10/1997 09:36 AJB

SAN JOAQUIN COUNTY, CALIFORNIA

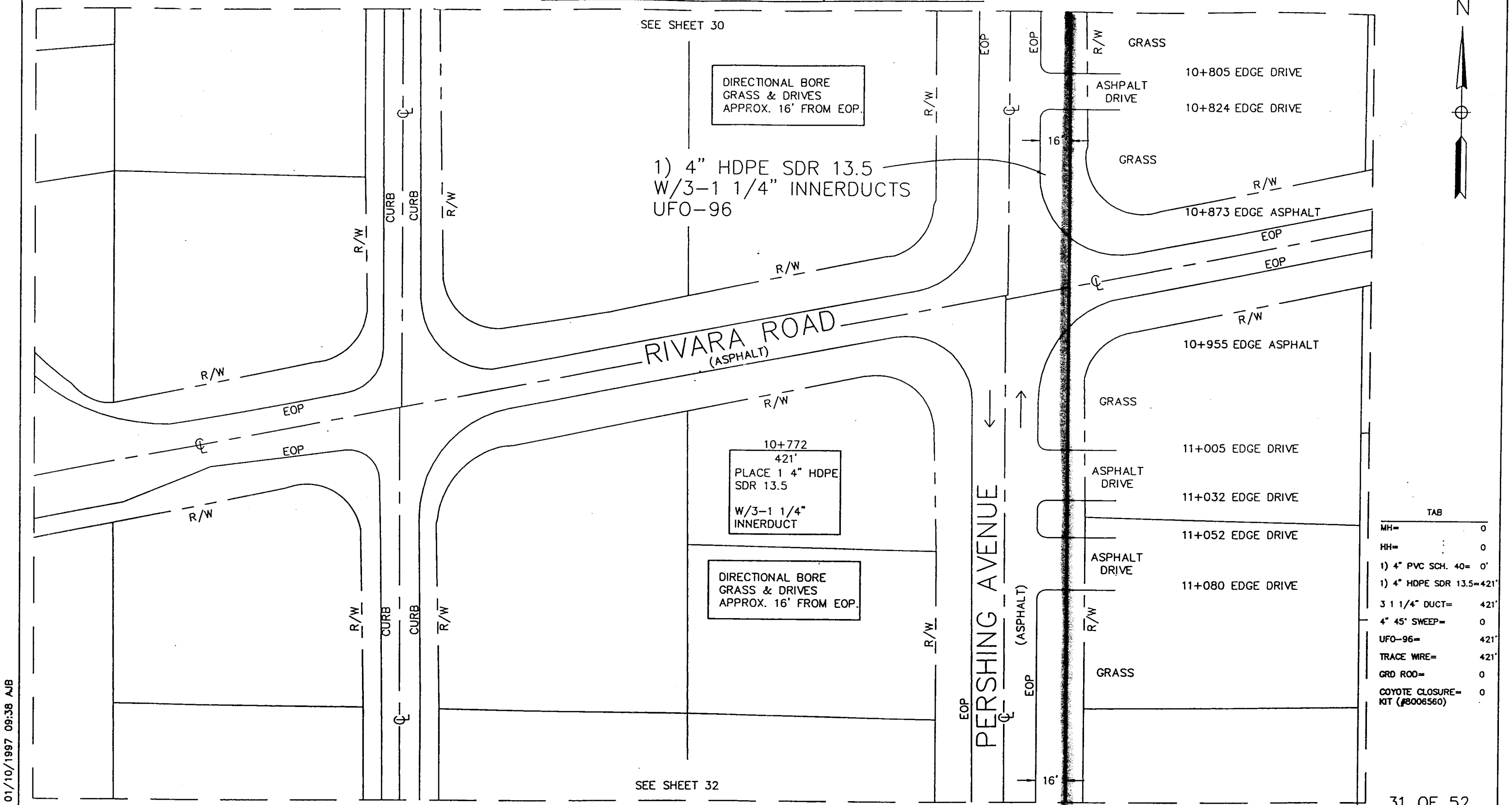

TAB	
MH=	0
HH=	0
1) 4" PVC SCH. 40=	0'
1) 4" HDPE SDR 13.5=	421'
3 1 1/4" DUCT=	421'
4" 45° SWEEP=	0
UFO-96=	421'
TRACE WIRE=	421'
GRD ROD=	0
COYOTE CLOSURE= KIT (#8006560)	0

SCALE – 1"=50'

CONTRACTOR IS RESPONSIBLE FOR ALL TRAFFIC SIGNAGE & TRAFFIC CONTROL IN ACCORDANCE WITH CITY AND STATE REGULATIONS.

PLACE CONDUIT AT A MINIMUM DEPTH OF 36"

CAUTION
LOCATE ALL UTILITIES PRIOR TO CONSTRUCTION

CAUTION:
UTILITY LOCATIONS ARE APPROX. AND ARE NOT TO BE TAKEN AS EXACT. BROOKS FIBER COMMUNICATIONS IS NOT RESPONSIBLE FOR LOCATES.

Contractor's Note:
The Locations Of Underground Facilities Shown Are Approximate. The Contractor Is Responsible For The Location And Preservation Of All Underground Utilities And Other Facilities Whether Shown Or Not Shown On These Drawings.

BROOKS FIBER COMMUNICATIONS OF STOCKTON, CA, INC.

INFORMATION IN THIS DOCUMENT IS PROPRIETARY AND SHALL NOT BE USED, COPIED, REPRODUCED OR DISCLOSED IN WHOLE OR IN PART WITHOUT WRITTEN CONSENT OF BROOKS FIBER COMMUNICATIONS.

STOCKTON, CA
EXCHANGE

UNIVERSAL ENGINEERING SERVICES, INC.
5118 S. 85th. E. AVE.
TULSA, OK 74145-8115
(918) 622-8330
FAX 918-664-6150

DATE: 11/14/96
REVISED:
MAP NO.: S821131_

FILE INFO: S821131_ 1=50 01/10/1997 09:38 AJB

SAN JOAQUIN COUNTY, CALIFORNIA

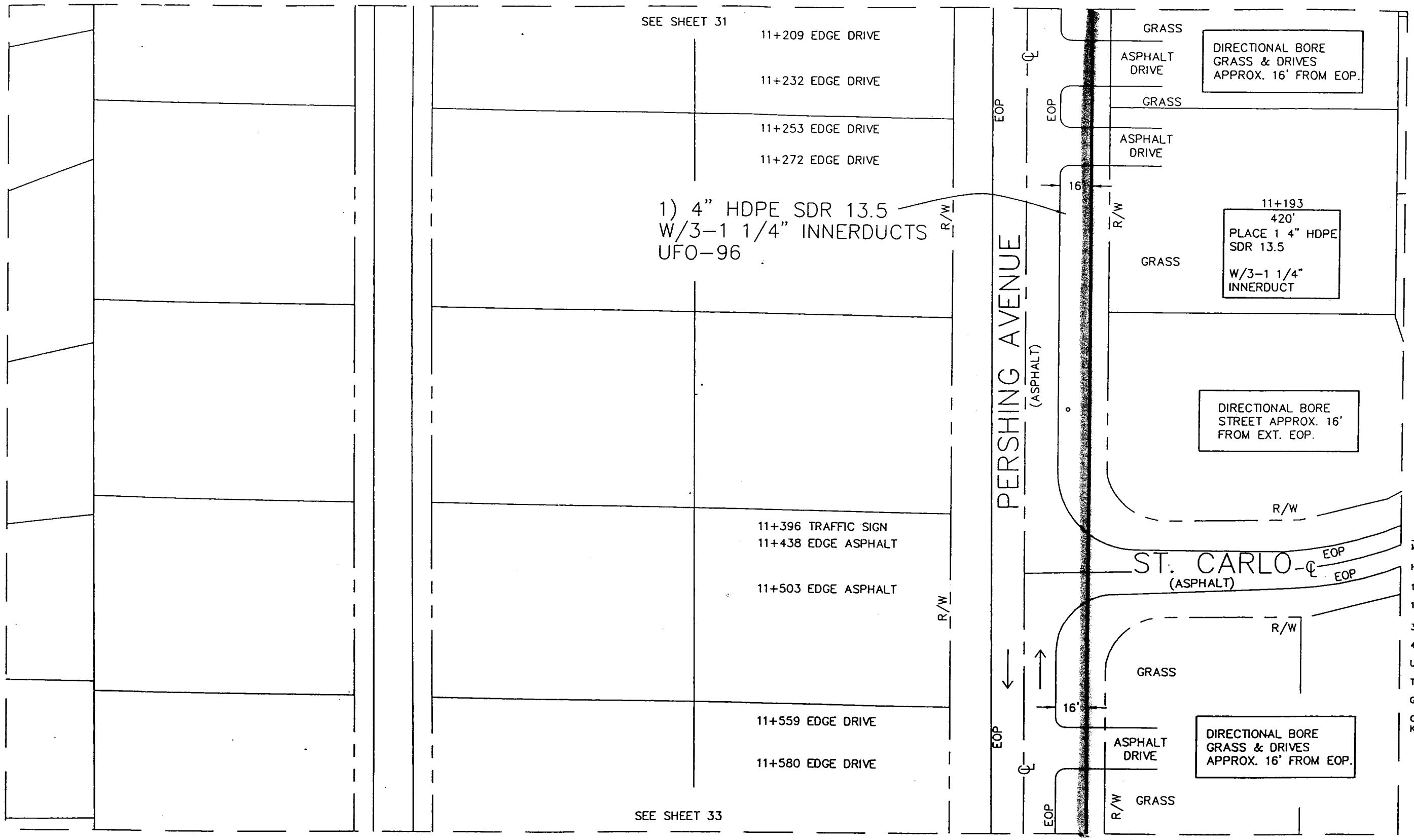

TAB	
MH=	0
HH=	0
1) 4" PVC SCH. 40=	0'
1) 4" HDPE SDR 13.5=	420'
3 1 1/4" DUCT=	420'
4" 45° SWEEP=	0
UFO-96=	420'
TRACE WIRE=	420'
GRD ROD=	0
COYOTE CLOSURE= KIT (#8006560)	0

SCALE - 1"=50'

CONTRACTOR IS RESPONSIBLE FOR ALL TRAFFIC SIGNAGE & TRAFFIC CONTROL IN ACCORDANCE WITH CITY AND STATE REGULATIONS.

PLACE CONDUIT AT A MINIMUM DEPTH OF 36"

CAUTION
LOCATE ALL UTILITIES PRIOR TO CONSTRUCTION

CAUTION:
UTILITY LOCATIONS ARE APPROX. AND ARE NOT TO BE TAKEN AS EXACT. BROOKS FIBER COMMUNICATIONS IS NOT RESPONSIBLE FOR LOCATES.

Contractor's Note:
The Locations Of Underground Facilities Shown Are Approximate. The Contractor Is Responsible For The Location And Preservation Of All Underground Utilities And Other Facilities Whether Shown Or Not Shown On These Drawings.

BROOKS FIBER COMMUNICATIONS OF STOCKTON, CA, INC.

INFORMATION IN THIS DOCUMENT IS PROPRIETARY AND SHALL NOT BE USED, COPIED, REPRODUCED OR DISCLOSED IN WHOLE OR IN PART WITHOUT WRITTEN CONSENT OF BROOKS FIBER COMMUNICATIONS.

STOCKTON, CA EXCHANGE

UNIVERSAL
5118 S. 85th. E. AVE.
TULSA, OK 74145-8115
(918) 622-8330
FAX 918-664-6150

DATE: 11/14/96
REVISED:
MAP NO.: S821132_

FILE INFO: S821132_ 1=50 01/10/1997 09:38 AJB

SAN JOAQUIN COUNTY, CALIFORNIA

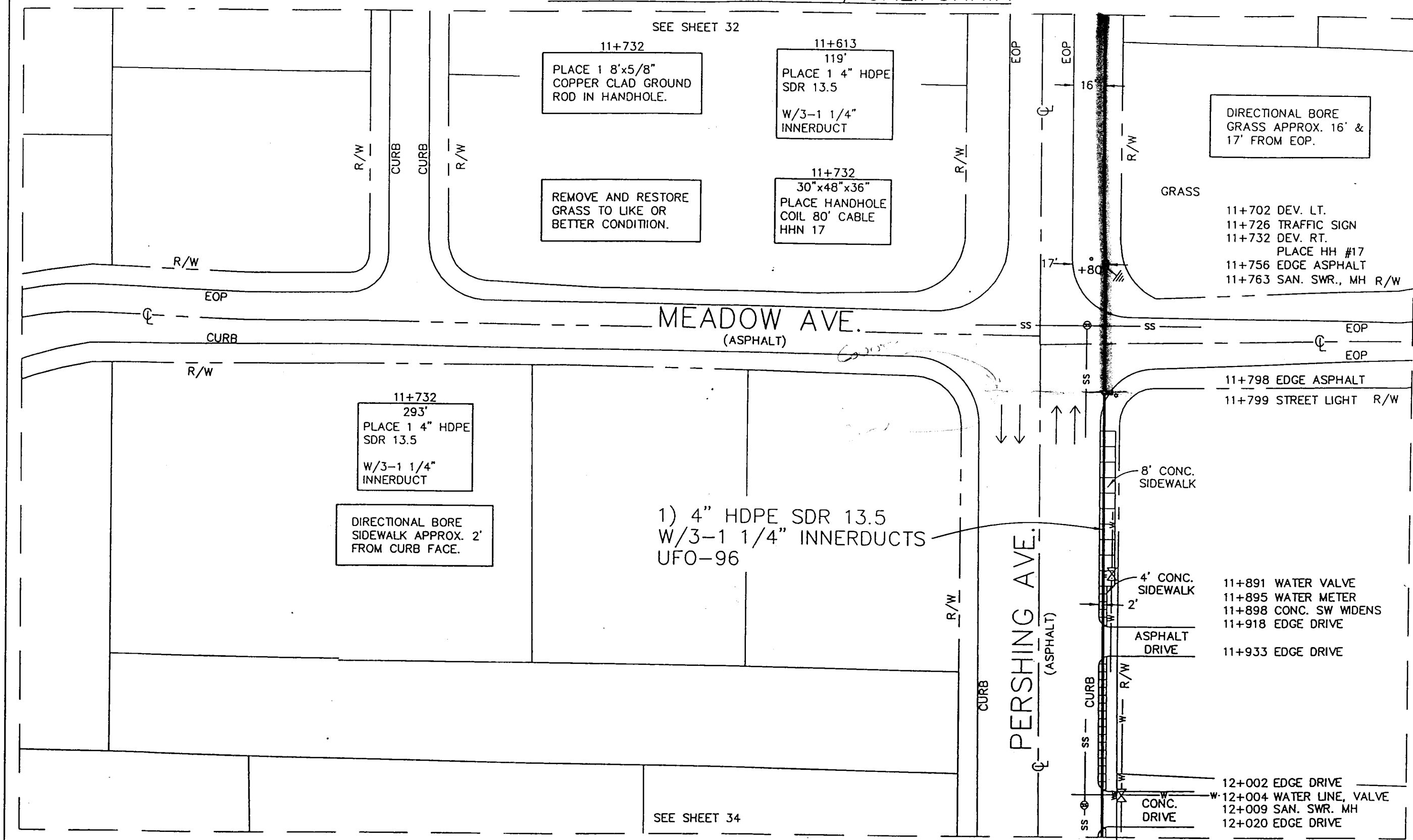

TAB	
MH=	0
HH=	1
1) 4" PVC SCH. 40=	0'
1) 4" HDPE SDR 13.5=	412'
3 1 1/4" DUCT=	412'
4" 45° SWEEP=	0
UFO-96=	492'
TRACE WIRE=	424'
GRD ROD=	1
COYOTE CLOSURE= KIT (#8006560)	0

SCALE – 1"=50'

CONTRACTOR IS RESPONSIBLE FOR ALL TRAFFIC SIGNAGE & TRAFFIC CONTROL IN ACCORDANCE WITH CITY AND STATE REGULATIONS.

PLACE CONDUIT AT A MINIMUM DEPTH OF 36"

CAUTION
LOCATE ALL UTILITIES PRIOR TO CONSTRUCTION

CAUTION:
UTILITY LOCATIONS ARE APPROX. AND ARE NOT TO BE TAKEN AS EXACT. BROOKS FIBER COMMUNICATIONS IS NOT RESPONSIBLE FOR LOCATES.

Contractor's Note:
The Locations Of Underground Facilities Shown Are Approximate. The Contractor Is Responsible For The Location And Preservation Of All Underground Utilities And Other Facilities Whether Shown Or Not Shown On These Drawings.

BROOKS FIBER COMMUNICATIONS OF STOCKTON, CA, INC.

INFORMATION IN THIS DOCUMENT IS PROPRIETARY AND SHALL NOT BE USED, COPIED, REPRODUCED OR DISCLOSED IN WHOLE OR IN PART WITHOUT WRITTEN CONSENT OF BROOKS FIBER COMMUNICATIONS.

STOCKTON, CA EXCHANGE

UNIVERSAL ENG. R.

5116 S. 85th. E. AVE.
TULSA, OK 74145-8115
(918) 622-4330
FAX 918-664-8150

DATE: 11/14/96
REVISED:
MAP NO.: S821133_

FILE INFO: S821133_ 1=50 01/10/1997 09:39 AJB

SAN JOAQUIN COUNTY, CALIFORNIA

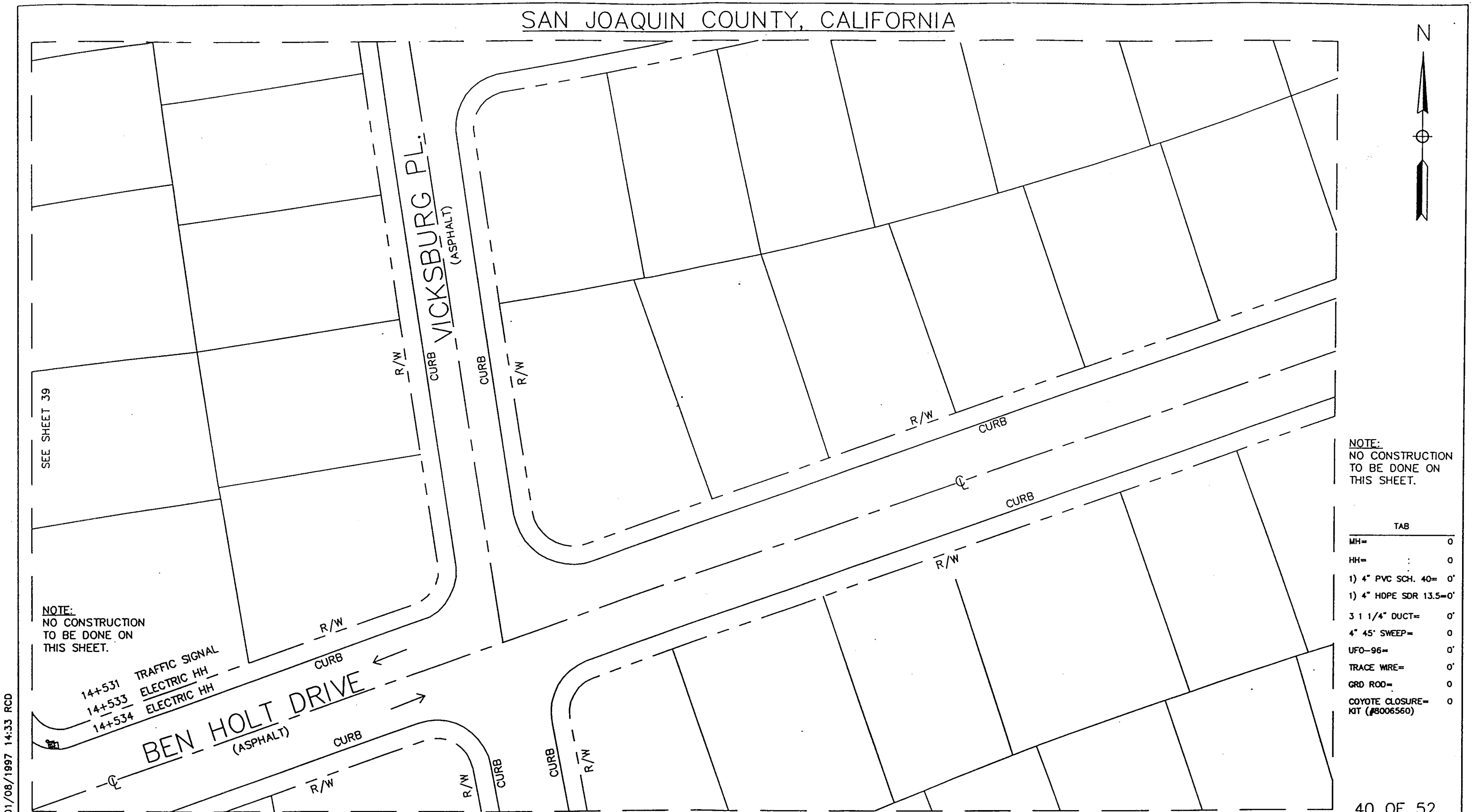

TAB	
MH=	0
HH=	0
1) 4" PVC SCH. 40=	0'
1) 4" HDPE SDR 13.5=	0'
3 1 1/4" DUCT=	0'
4" 45° SWEEP=	0
UFO-96=	0'
TRACE WIRE=	0'
GRD ROD=	0
COYOTE CLOSURE= KIT (#8006560)	0

SCALE – 1"=50'

CONTRACTOR IS RESPONSIBLE FOR ALL TRAFFIC SIGNAGE & TRAFFIC CONTROL IN ACCORDANCE WITH CITY AND STATE REGULATIONS.

PLACE CONDUIT AT A MINIMUM DEPTH OF 36"

CAUTION
LOCATE ALL UTILITIES PRIOR TO CONSTRUCTION

CAUTION:
UTILITY LOCATIONS ARE APPROX. AND ARE NOT TO BE TAKEN AS EXACT. BROOKS FIBER COMMUNICATIONS IS NOT RESPONSIBLE FOR LOCATES.

Contractor's Note:
The Locations Of Underground Facilities Shown Are Approximate. The Contractor Is Responsible For The Location And Preservation Of All Underground Utilities And Other Facilities Whether Shown Or Not Shown On These Drawings.

BROOKS FIBER COMMUNICATIONS OF STOCKTON, CA, INC.

INFORMATION IN THIS DOCUMENT IS PROPRIETARY AND SHALL NOT BE USED, COPIED, REPRODUCED OR DISCLOSED IN WHOLE OR IN PART WITHOUT WRITTEN CONSENT OF BROOKS FIBER COMMUNICATIONS.

STOCKTON, CA EXCHANGE

UNIVERSAL
9118 S. 95th. E. AVE.
TULSA, OK 74145-8113
(918) 622-8330
FAX 918-664-6150

DATE: 11/15/96
REVISED:
MAP NO.: S821140_ REV. 1

FILE INFO: S821140_ 1=50 01/08/1997 14:33 RCD

SAN JOAQUIN COUNTY, CALIFORNIA

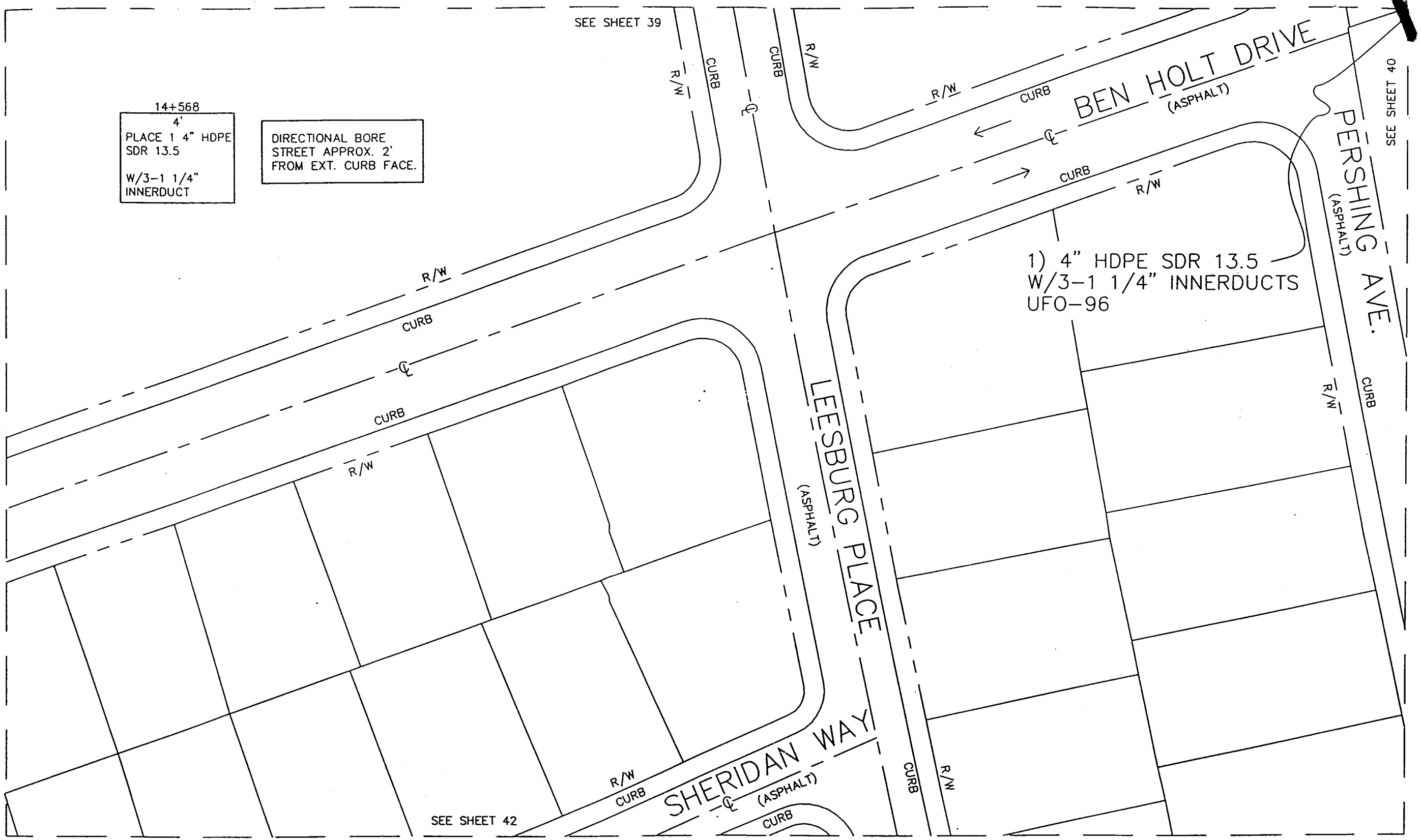

TAB	
MH=	0
HH=	0
1) 4" PVC SCH. 40=	0'
1) 4" HDPE SDR 13.5=	4'
3 1 1/4" DUCT=	4'
4" 45° SWEEP=	0
UFO-96=	4'
TRACE WIRE=	4'
GRD ROD=	0
COYOTE CLOSURE= KIT (#8006560)	0

SCALE – 1"=50'

CONTRACTOR IS RESPONSIBLE FOR ALL TRAFFIC SIGNAGE & TRAFFIC CONTROL IN ACCORDANCE WITH CITY AND STATE REGULATIONS.

PLACE CONDUIT AT A MINIMUM DEPTH OF 36"

CAUTION
LOCATE ALL UTILITIES PRIOR TO CONSTRUCTION

CAUTION:
UTILITY LOCATIONS ARE APPROX. AND ARE NOT TO BE TAKEN AS EXACT. BROOKS FIBER COMMUNICATIONS IS NOT RESPONSIBLE FOR LOCATES.

Contractor's Note

The Locations Of Underground Facilities Shown Are Approximate. The Contractor Is Responsible For The Location And Preservation Of All Underground Utilities And Other Facilities Whether Shown Or Not Shown On These Drawings.

BROOKS FIBER COMMUNICATIONS OF STOCKTON, CA, INC.

INFORMATION IN THIS DOCUMENT IS PROPRIETARY AND SHALL NOT BE USED, COPIED, REPRODUCED OR DISCLOSED IN WHOLE OR IN PART WITHOUT WRITTEN CONSENT OF BROOKS FIBER COMMUNICATIONS.

STOCKTON, CA EXCHANGE

UNIVERSAL
5118 S. 95th. E. AVE.
TULSA, OK 74145-8115
(918) 622-8330
FAX 918-664-8150

DATE: 11/15/96

REVISED:

MAP NO.: S821141_

FILE INFO: S821141_ 1=50 01/08/1997 14:34 RCD

SAN JOAQUIN COUNTY, CALIFORNIA

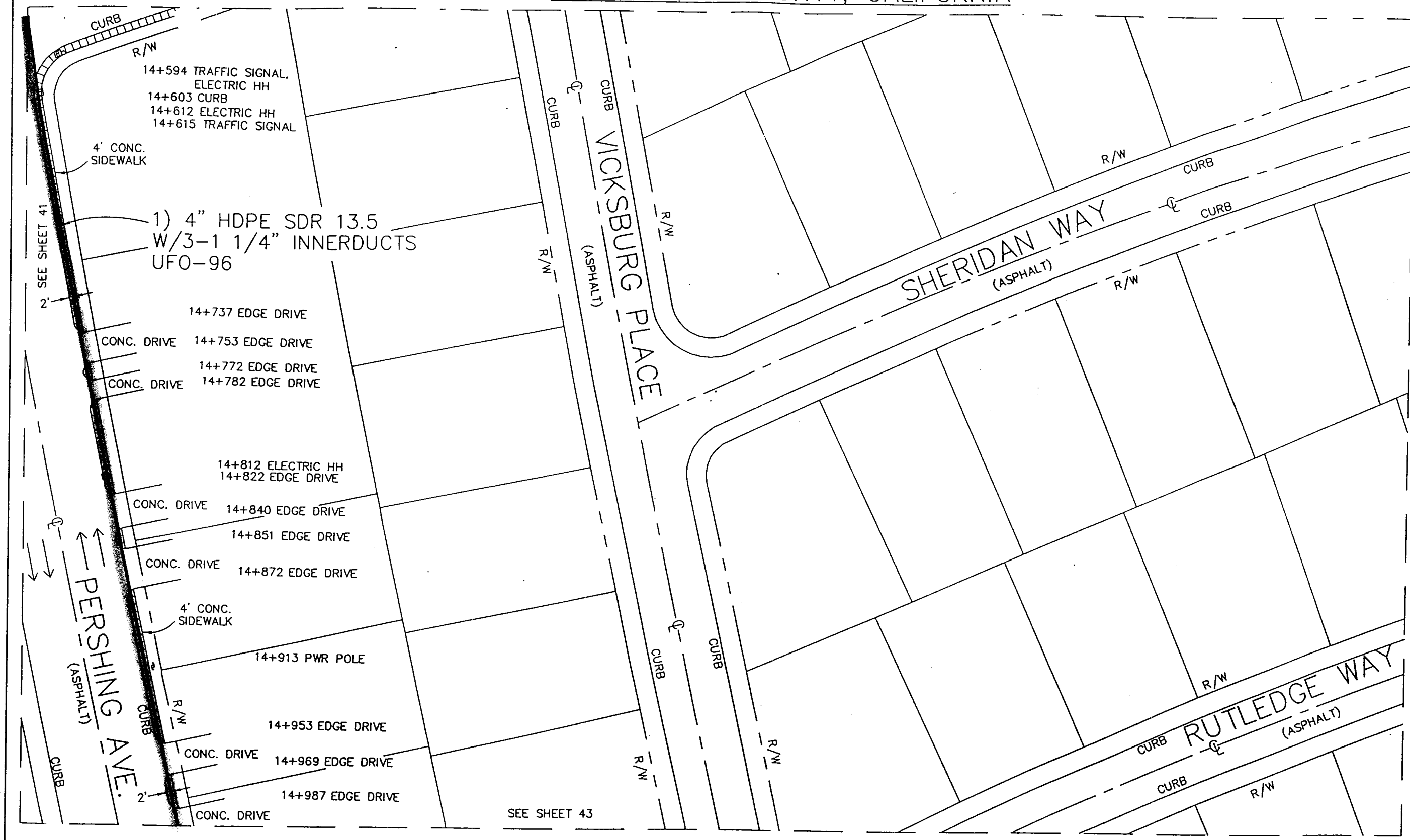

TAB	
MH=	0
HH=	0
1) 4" PVC SCH. 40=	0'
1) 4" HDPE SDR 13.5=	424'
3 1 1/4" DUCT=	424'
4" 45° SWEEP=	0
UFO-96=	424'
TRACE WIRE=	424'
GRD ROD=	0
COYOTE CLOSURE KIT (#8006560) =	0

SCALE – 1"=50'

CONTRACTOR IS RESPONSIBLE FOR ALL TRAFFIC SIGNAGE & TRAFFIC CONTROL IN ACCORDANCE WITH CITY AND STATE REGULATIONS.

PLACE CONDUIT AT A MINIMUM DEPTH OF 36"

CAUTION
LOCATE ALL UTILITIES PRIOR TO CONSTRUCTION

CAUTION:
UTILITY LOCATIONS ARE APPROX. AND ARE NOT TO BE TAKEN AS EXACT. BROOKS FIBER COMMUNICATIONS IS NOT RESPONSIBLE FOR LOCATES.

Contractor's Note:
The Locations Of Underground Facilities Shown Are Approximate. The Contractor Is Responsible For The Location And Preservation Of All Underground Utilities And Other Facilities Whether Shown Or Not Shown On These Drawings.

BROOKS FIBER COMMUNICATIONS OF STOCKTON, CA, INC.

INFORMATION IN THIS DOCUMENT IS PROPRIETARY AND SHALL NOT BE USED, COPIED, REPRODUCED OR DISCLOSED IN WHOLE OR IN PART WITHOUT WRITTEN CONSENT OF BROOKS FIBER COMMUNICATIONS.

STOCKTON, CA EXCHANGE

UNIVERSAL
5118 S. 85th. E. AVE.
TULSA, OK 74145-8115
(918) 622-8330
FAX 918-664-6150

DATE: 11/15/96
REVISED:
MAP NO.: S821142_

FILE INFO: S821142_ 1=50 01/08/1997 14:35 RCD

SAN JOAQUIN COUNTY, CALIFORNIA

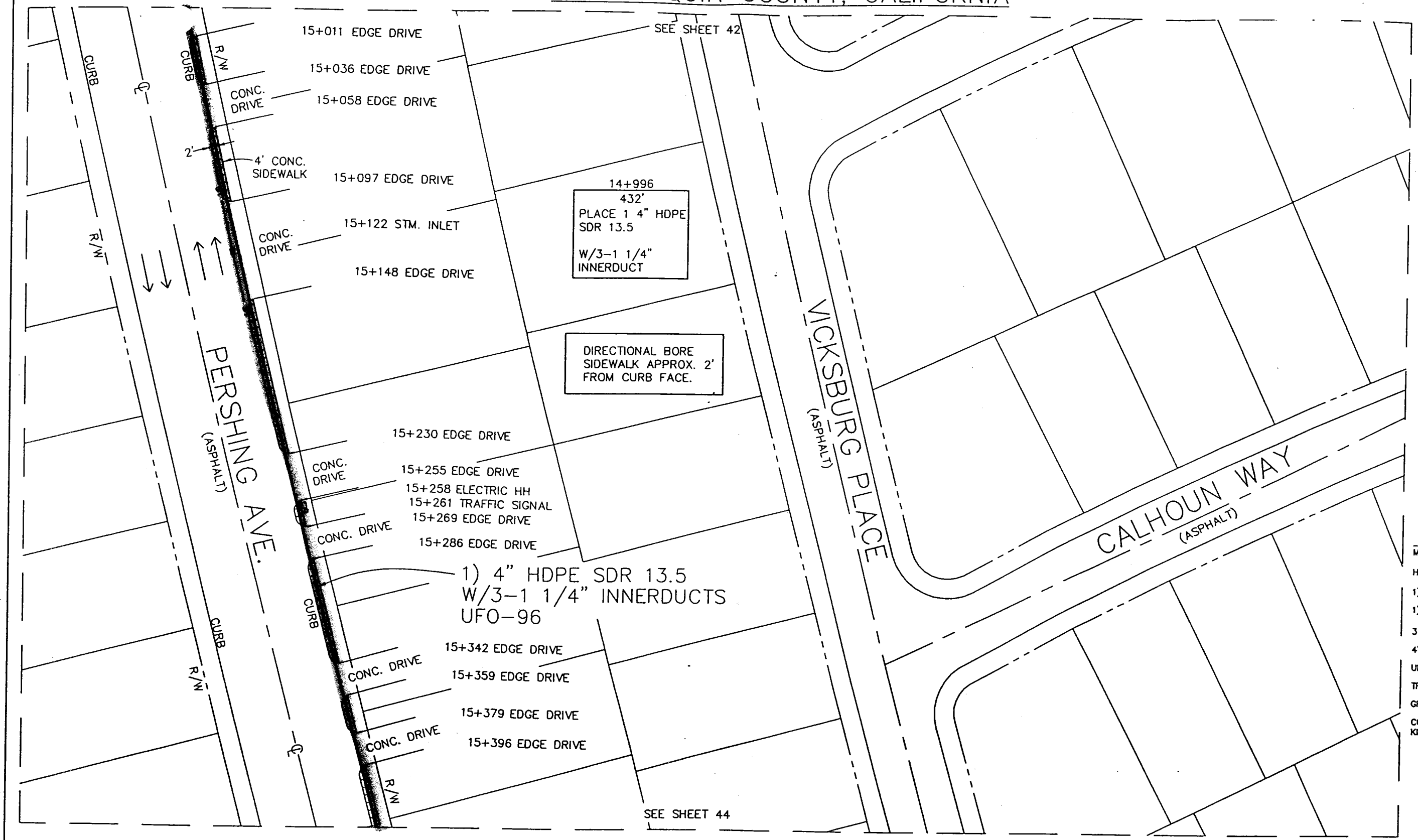

TAB	
MH=	0
HH=	0
1) 4" PVC SCH. 40=	0'
1) 4" HDPE SDR 13.5=	432'
3 1 1/4" DUCT=	432'
4" 45° SWEEP=	0
UFO-96=	432'
TRACE WIRE=	432'
GRD ROD=	0
COYOTE CLOSURE= KIT (#8006560)	0

SCALE – 1"=50'

CONTRACTOR IS RESPONSIBLE FOR ALL TRAFFIC SIGNAGE & TRAFFIC CONTROL IN ACCORDANCE WITH CITY AND STATE REGULATIONS.

PLACE CONDUIT AT A MINIMUM DEPTH OF 36"

CAUTION
LOCATE ALL UTILITIES PRIOR TO CONSTRUCTION

CAUTION:
UTILITY LOCATIONS ARE APPROX. AND ARE NOT TO BE TAKEN AS EXACT. BROOKS FIBER COMMUNICATIONS IS NOT RESPONSIBLE FOR LOCATES.

Contractor's Note:
The Locations Of Underground Facilities Shown Are Approximate. The Contractor Is Responsible For The Location And Preservation Of All Underground Utilities And Other Facilities Whether Shown Or Not Shown On These Drawings.

BROOKS FIBER COMMUNICATIONS OF STOCKTON, CA, INC.

INFORMATION IN THIS DOCUMENT IS PROPRIETARY AND SHALL NOT BE USED, COPIED, REPRODUCED OR DISCLOSED IN WHOLE OR IN PART WITHOUT WRITTEN CONSENT OF BROOKS FIBER COMMUNICATIONS.

STOCKTON, CA EXCHANGE

UNIVERSAL
9118 S. 95th. E. AVE.
TULSA, OK 74145-8115
(918) 622-4330
FAX 918-664-6150

DATE: 11/18/96

REVISED:

MAP NO.: S821143_

FILE INFO: S821143_ 1=50 01/08/1997 14:37 RCD

SAN JOAQUIN COUNTY, CALIFORNIA

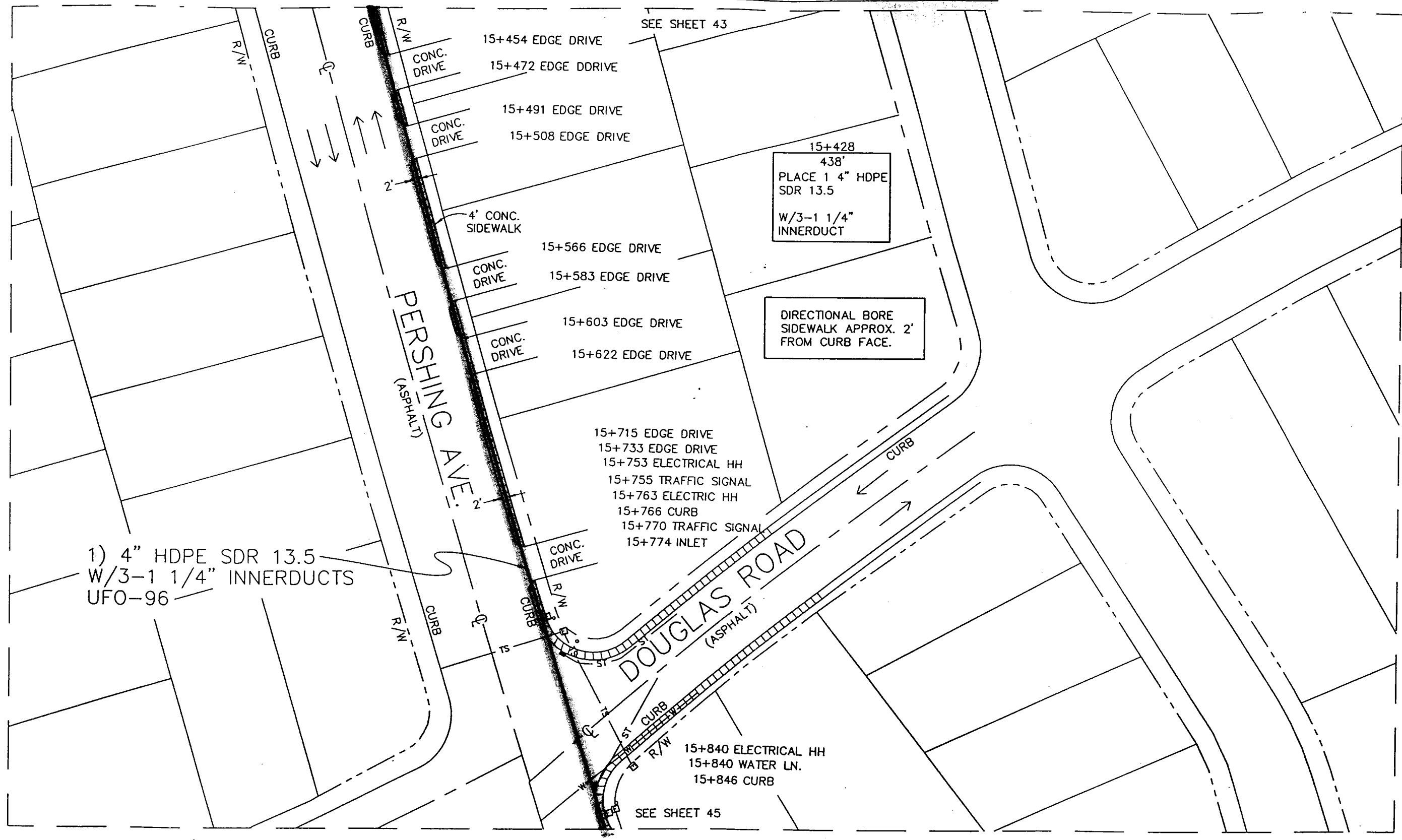

TAB	
MH=	0
HH=	0
1) 4" PVC SCH. 40=	0'
1) 4" HDPE SDR 13.5=	438'
3 1 1/4" DUCT=	438'
4" 45° SWEEP=	0
UFO-96=	438'
TRACE WIRE=	438'
GRD ROD=	0
COYOTE CLOSURE= KIT (#8006560)	0

SCALE – 1"=50'

CONTRACTOR IS RESPONSIBLE FOR ALL TRAFFIC SIGNAGE & TRAFFIC CONTROL IN ACCORDANCE WITH CITY AND STATE REGULATIONS.

PLACE CONDUIT AT A MINIMUM DEPTH OF 36"

CAUTION
LOCATE ALL UTILITIES PRIOR TO CONSTRUCTION

CAUTION:
UTILITY LOCATIONS ARE APPROX. AND ARE NOT TO BE TAKEN AS EXACT. BROOKS FIBER COMMUNICATIONS IS NOT RESPONSIBLE FOR LOCATES.

Contractor's Note:
The Locations Of Underground Facilities Shown Are Approximate. The Contractor Is Responsible For The Location And Preservation Of All Underground Utilities And Other Facilities Whether Shown Or Not Shown On These Drawings.

BROOKS FIBER COMMUNICATIONS OF STOCKTON, CA, INC.

INFORMATION IN THIS DOCUMENT IS PROPRIETARY AND SHALL NOT BE USED, COPIED, REPRODUCED OR DISCLOSED IN WHOLE OR IN PART WITHOUT WRITTEN CONSENT OF BROOKS FIBER COMMUNICATIONS.

STOCKTON, CA EXCHANGE

UNIVERSAL
5118 S. 95th. E. AVE.
TULSA, OK 74145-8115
(918) 622-8330
FAX 918-664-8150

DATE: 11/18/96
REVISED:
MAP NO.: S821144_

FILE INFO: S821144_ 1=50 01/08/1997 14:37 RCD

SAN JOAQUIN COUNTY, CALIFORNIA

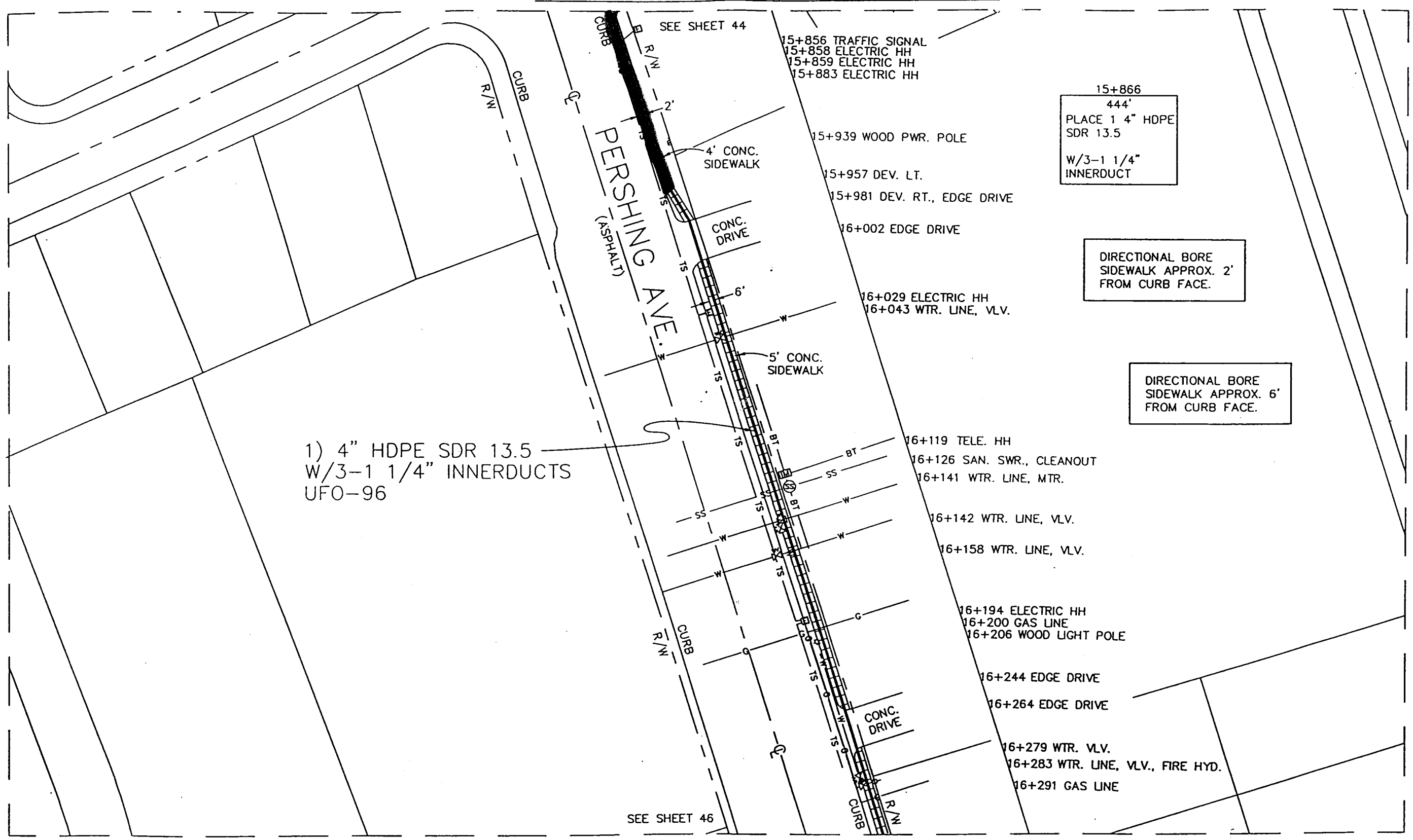

TAB	
MH=	0
HH=	0
1) 4" PVC SCH. 40=	0'
1) 4" HDPE SDR 13.5=	444'
3 1 1/4" DUCT=	444'
4" 45° SWEEP=	0
UFO-96=	444'
TRACE WIRE=	444'
GRD ROD=	0
COYOTE CLOSURE= KIT (#8006560)	0

SCALE – 1"=50'

CONTRACTOR IS RESPONSIBLE FOR ALL TRAFFIC SIGNAGE & TRAFFIC CONTROL IN ACCORDANCE WITH CITY AND STATE REGULATIONS.

PLACE CONDUIT AT A MINIMUM DEPTH OF 36"

CAUTION
LOCATE ALL UTILITIES PRIOR TO CONSTRUCTION

CAUTION:
UTILITY LOCATIONS ARE APPROX. AND ARE NOT TO BE TAKEN AS EXACT. BROOKS FIBER COMMUNICATIONS IS NOT RESPONSIBLE FOR LOCATES.

Contractor's Note:
The Locations Of Underground Facilities Shown Are Approximate. The Contractor Is Responsible For The Location And Preservation Of All Underground Utilities And Other Facilities Whether Shown Or Not Shown On These Drawings.

BROOKS FIBER COMMUNICATIONS OF STOCKTON, CA, INC.

INFORMATION IN THIS DOCUMENT IS PROPRIETARY AND SHALL NOT BE USED, COPIED, REPRODUCED OR DISCLOSED IN WHOLE OR IN PART WITHOUT WRITTEN CONSENT OF BROOKS FIBER COMMUNICATIONS.

STOCKTON, CA EXCHANGE

UNIVERSAL
5118 S. 95th. E. AVE.
TULSA, OK 74145-8115
(918) 622-8330
FAX 918-664-8150

DATE: 11/18/96
REVISED:
MAP NO.: S821145_

FILE INFO: S821145_ 1=50 01/08/1997 14:39 RCD

OFF STREET PLACEMENT

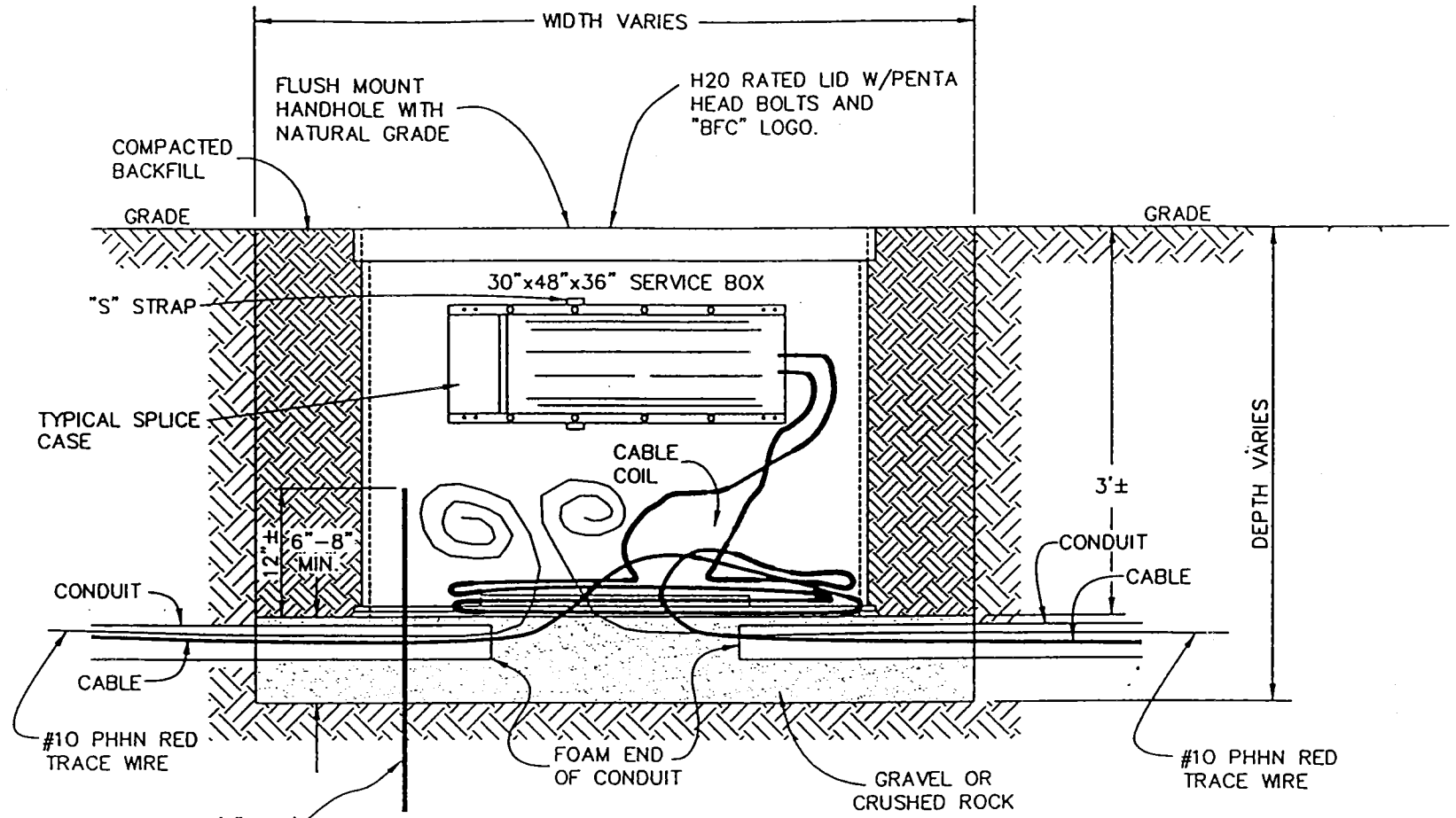

HANDHOLE PLACEMENT DETAIL

NOT TO SCALE

NOTE:
GROUND ROD AND WIRE, TRACE WIRE AND SIP 40 TO BE PLACED IN NEW BUILD UNDERGROUND CONDUIT SECTIONS ONLY.

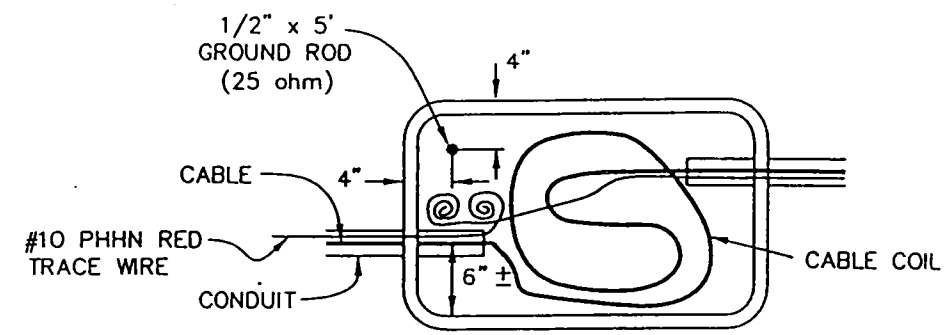

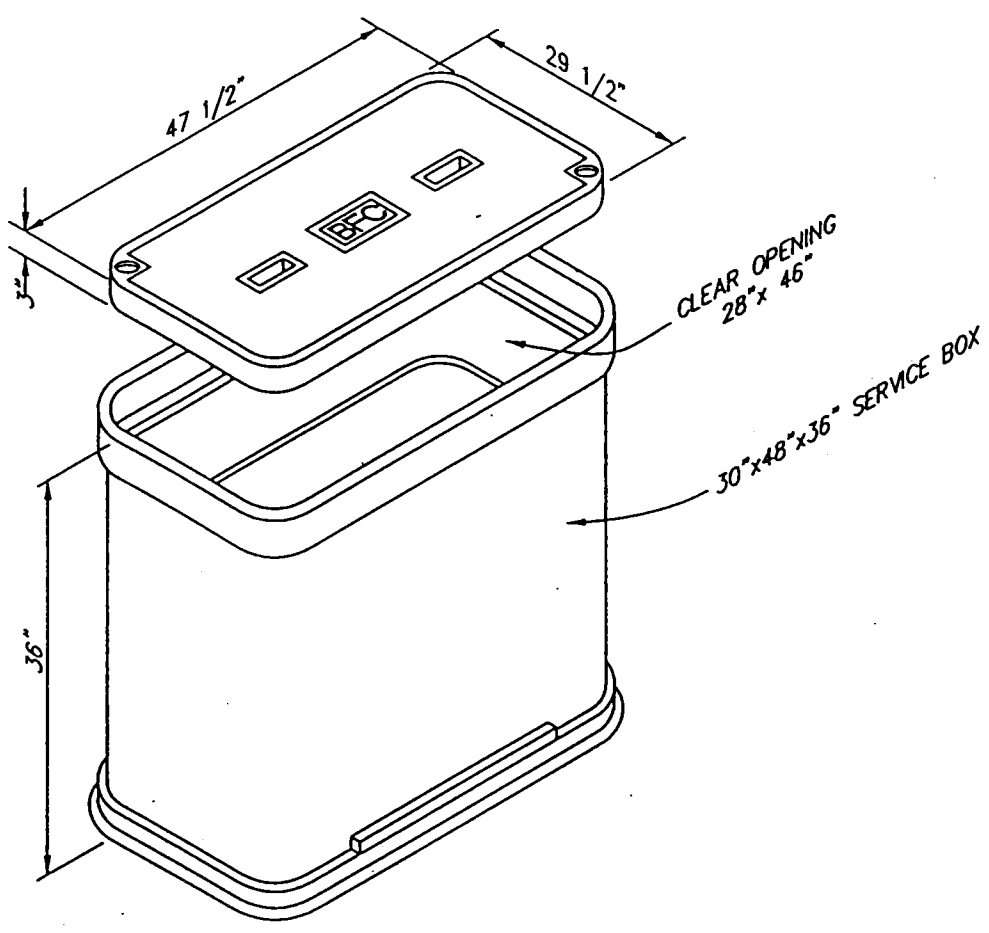

NOTES:

1. HANDHOLE TO BE PLACED LEVEL, BOTH WAYS.
2. BACKFILL SHALL BE SPOIL MATERIAL FREE FROM ANY DEBRIS.
3. BACKFILL WILL BE COMPACTED IN SIX INCH LIFTS TO EXISTING GRADE COMPACTION.

BROOKS FIBER COMMUNICATIONS

INFORMATION IN THIS DOCUMENT IS PROPRIETARY AND SHALL NOT BE USED, COPIED, REPRODUCED OR DISCLOSED IN WHOLE OR IN PART WITHOUT WRITTEN CONSENT OF BROOKS FIBER PROPERTIES.

TITLE: ALTERNATIVE ACCESS TELECOMMUNICATIONS SYSTEM

TYPICAL HANDHOLE PLACEMENT DETAILS

UNIVERSAL ENGCO, INC.
5118 S. 85th. E. AVE.
TULSA, OK 74145-8115
(918) 622-6330
FAX 918-664-6150

FILE INFO: TYPHH 1=1 01/04/1997 09:18 AJB

STREET PLACEMENT

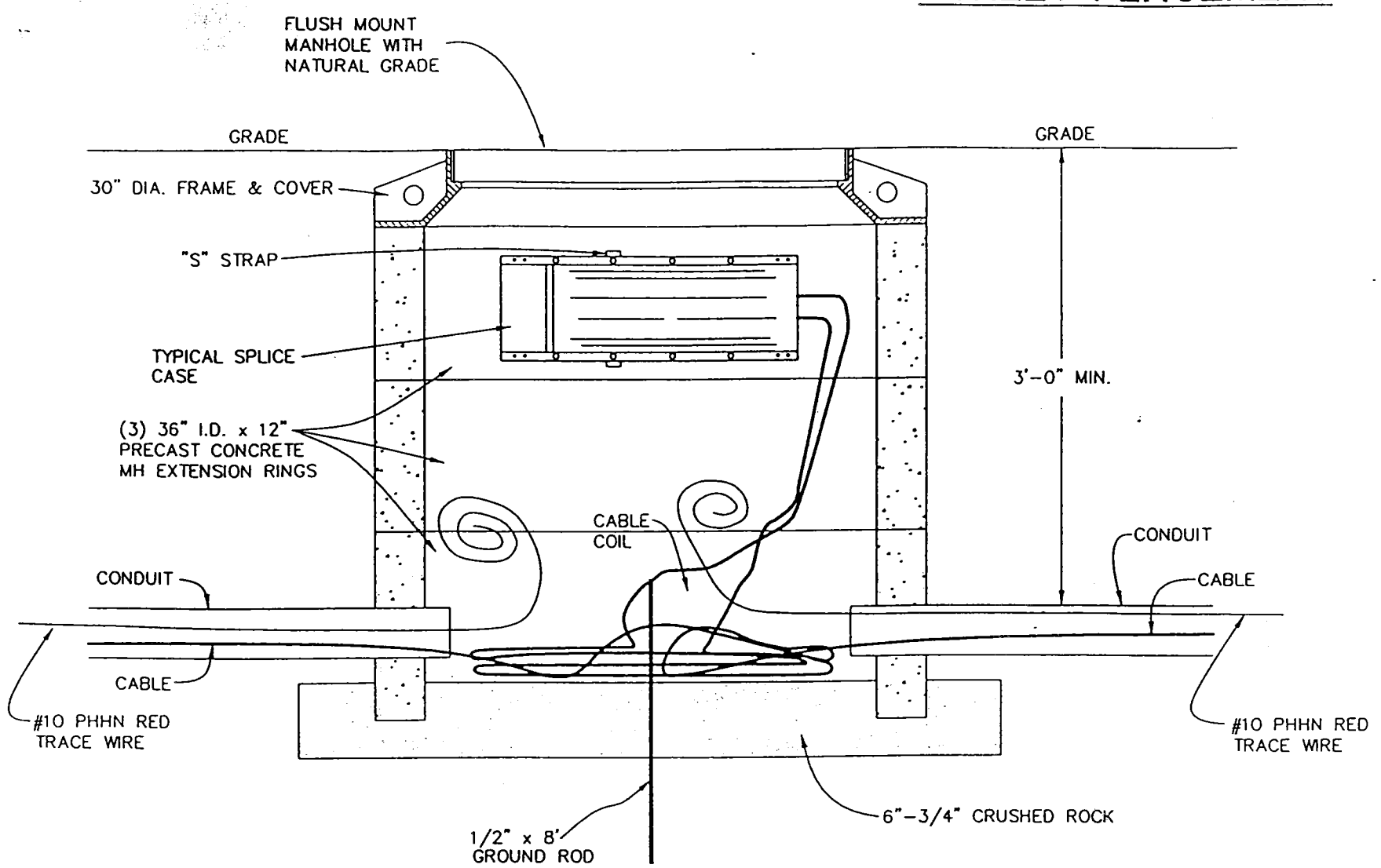

MANHOLE PLACEMENT DETAIL

NOT TO SCALE

NOTE:
GROUND ROD AND WIRE, TRACE WIRE AND SIP 40 TO BE PLACED IN NEW BUILD UNDERGROUND CONDUIT SECTIONS ONLY.

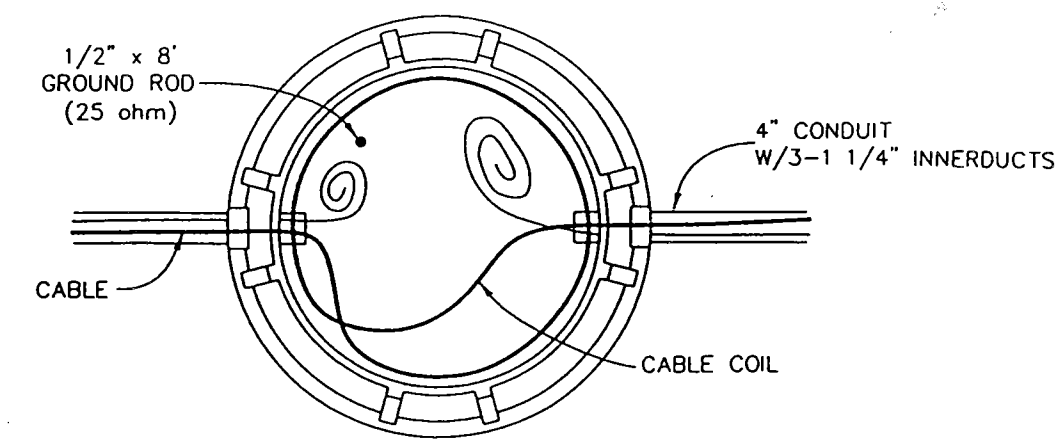

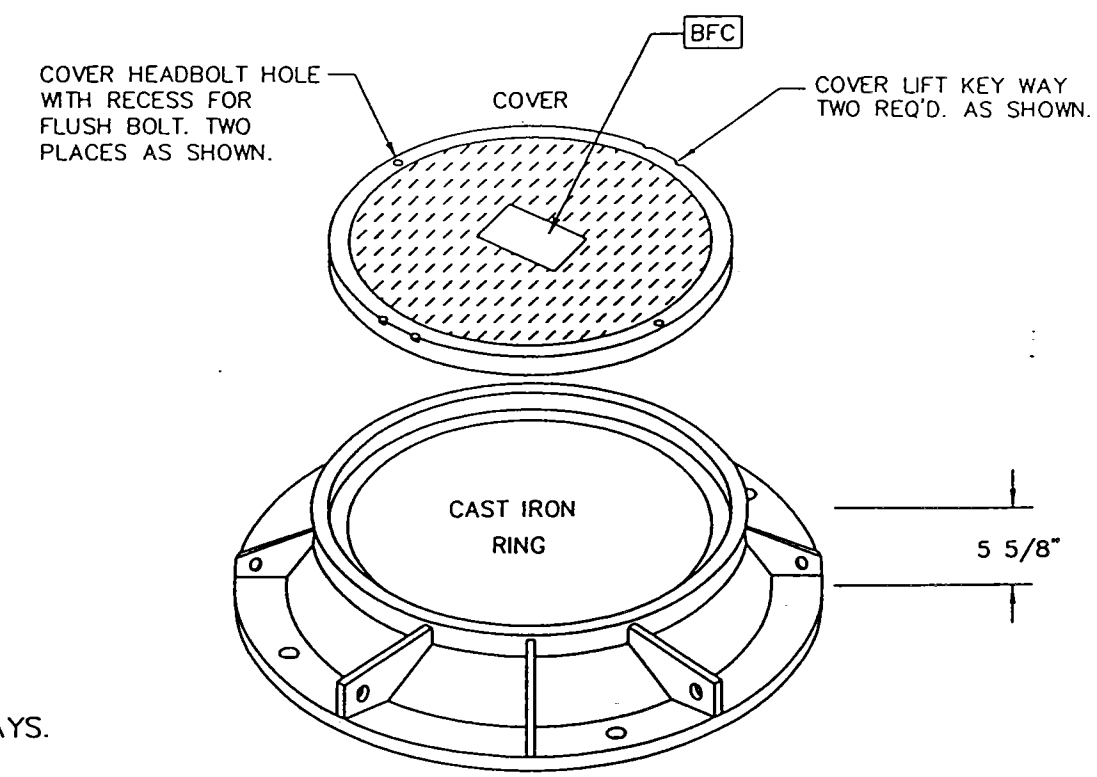

TYPICAL FRAME & COVER

N.T.S.

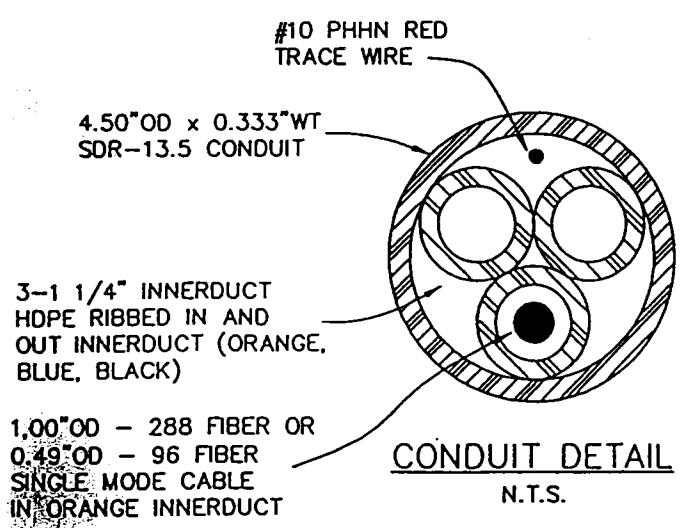

CONDUIT DETAIL

N.T.S.

NOTES:

1. MANHOLE TO BE PLACED LEVEL, BOTH WAYS.
2. BACKFILL SHALL BE SPOIL MATERIAL FREE FROM ANY DEBRIS.
3. BACKFILL WILL BE COMPACTED IN SIX INCH LIFTS TO EXISTING GRADE COMPACTION.

BROOKS FIBER COMMUNICATIONS

INFORMATION IN THIS DOCUMENT IS PROPRIETARY AND SHALL NOT BE USED, COPIED, REPRODUCED OR DISCLOSED IN WHOLE OR IN PART WITHOUT WRITTEN CONSENT OF BROOKS FIBER PROPERTIES.

TITLE: ALTERNATIVE ACCESS TELECOMMUNICATIONS SYSTEM

TYPICAL MANHOLE PLACEMENT DETAILS

UNIVERSAL ENGCO, INC.
5116 S. 95th. E. AVE.
TULSA, OK 74145-8115
(918) 622-8330
FAX 918-664-6150

FILE INFO: CATYPMH 1=1 01/14/1997 15:26 JAJ

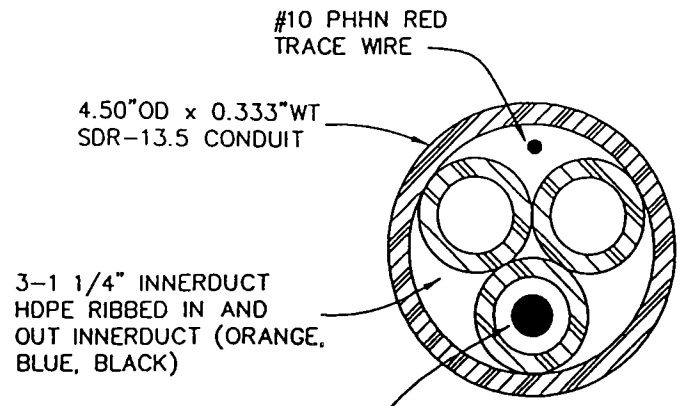

CONDUIT DETAIL

N.T.S.

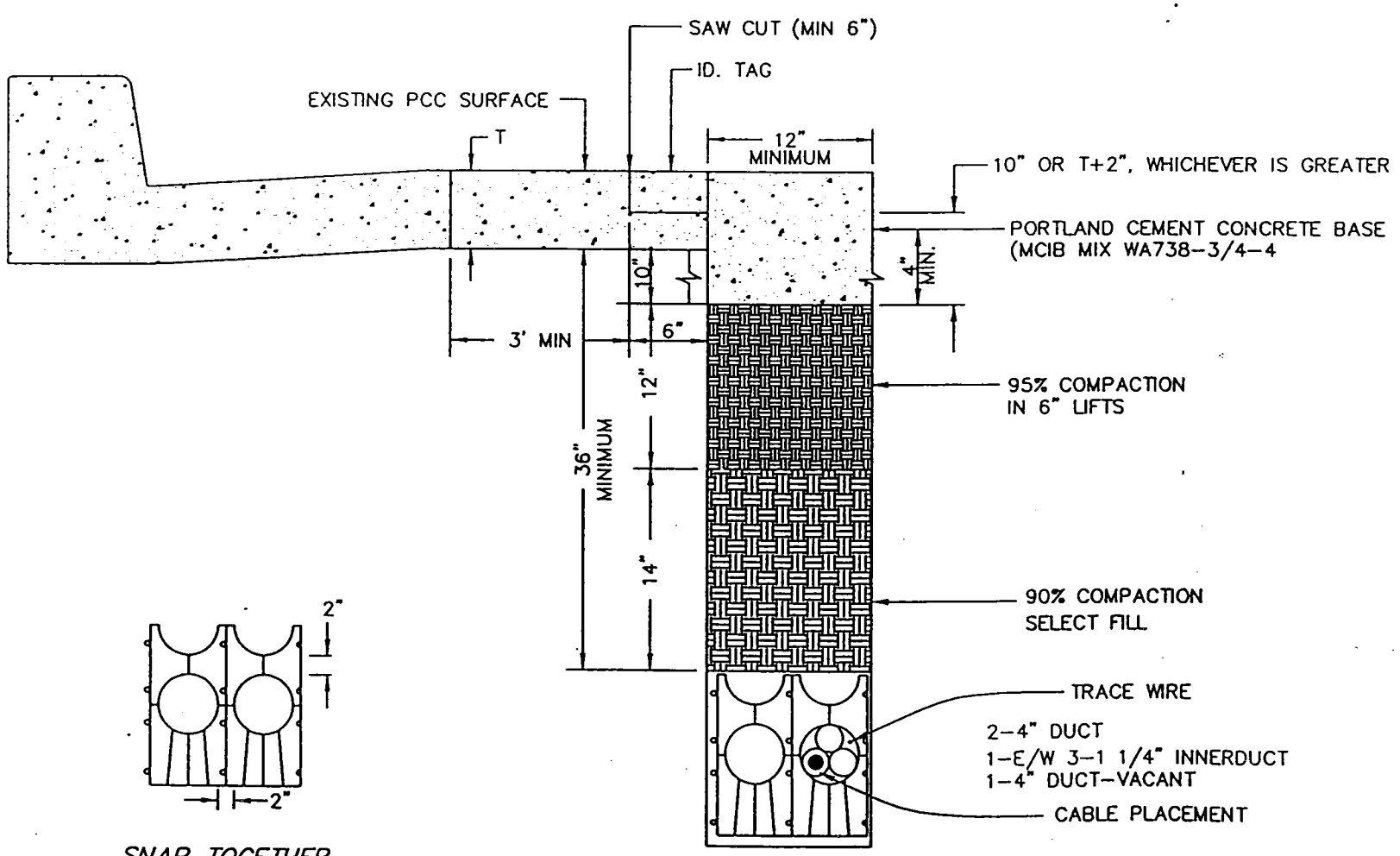

SNAP TOGETHER
TWO CONDUIT
SPACER

CUT & PLACE DETAIL
TWO DUCT 36" DEPTH

P.C. CONCRETE PAVEMENT SURFACE

NOT TO SCALE

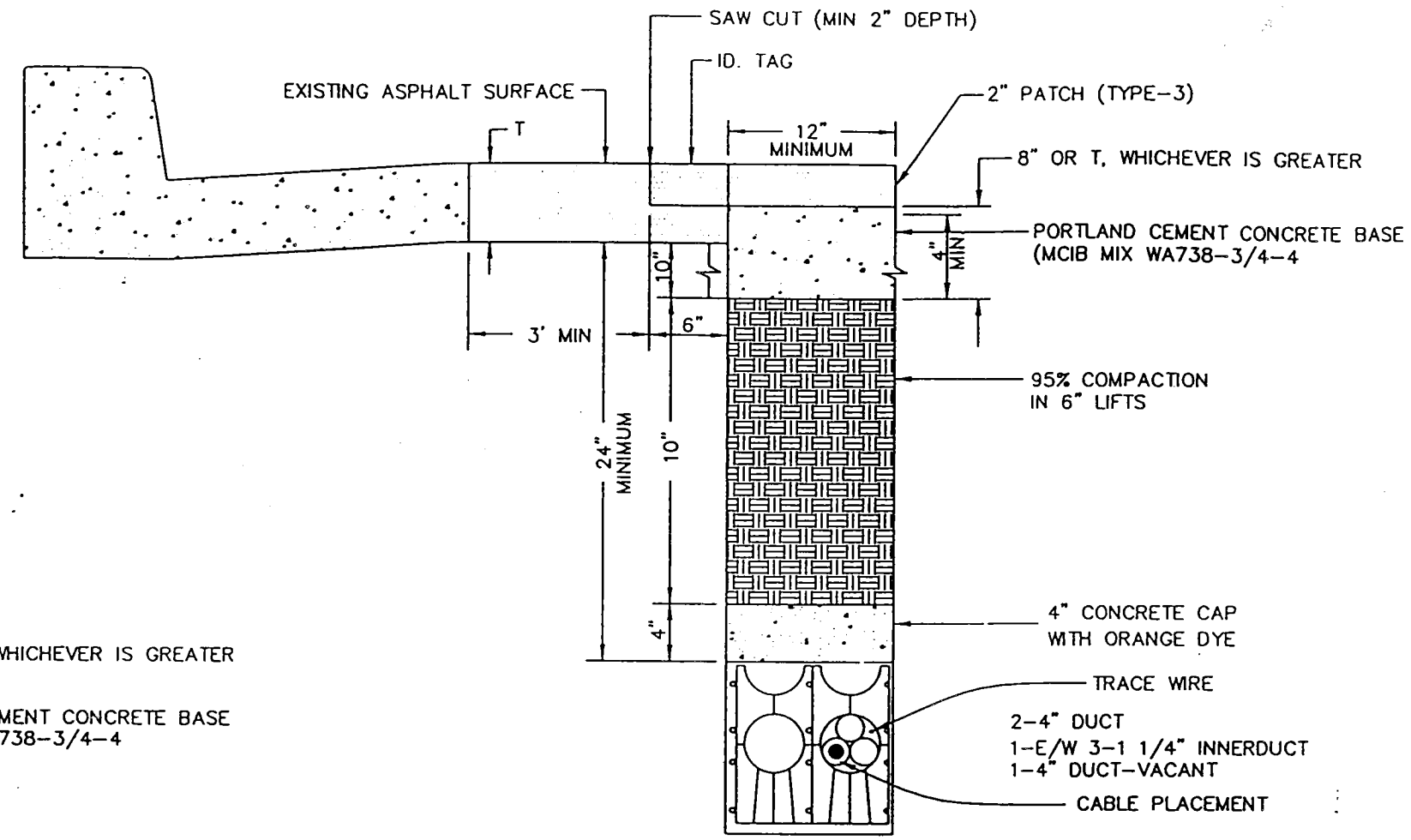

CUT & PLACE DETAIL
TWO DUCT 24" DEPTH RESTRICTION

ASPHALT PAVEMENT SURFACE

NOT TO SCALE

TYPICAL DUCT PLACEMENT

BROOKS FIBER COMMUNICATIONS

INFORMATION IN THIS DOCUMENT IS PROPRIETARY AND SHALL NOT BE USED, COPIED, REPRODUCED OR DISCLOSED IN WHOLE OR IN PART WITHOUT WRITTEN CONSENT OF BROOKS FIBER PROPERTIES.

TITLE:

ALTERNATIVE ACCESS
TELECOMMUNICATIONS SYSTEM

TYPICAL DUCT PLACEMENT/RESTORATION DETAILS

UNIVERSAL ENSCO, INC.
5118 S. 85th E. AVENUE
TULSA, OK 74145-8115
(918) 622-6330
FAX 918-664-6150

ILE INFO: RESTORE 1=1 12/12/1996 16:31 AJB

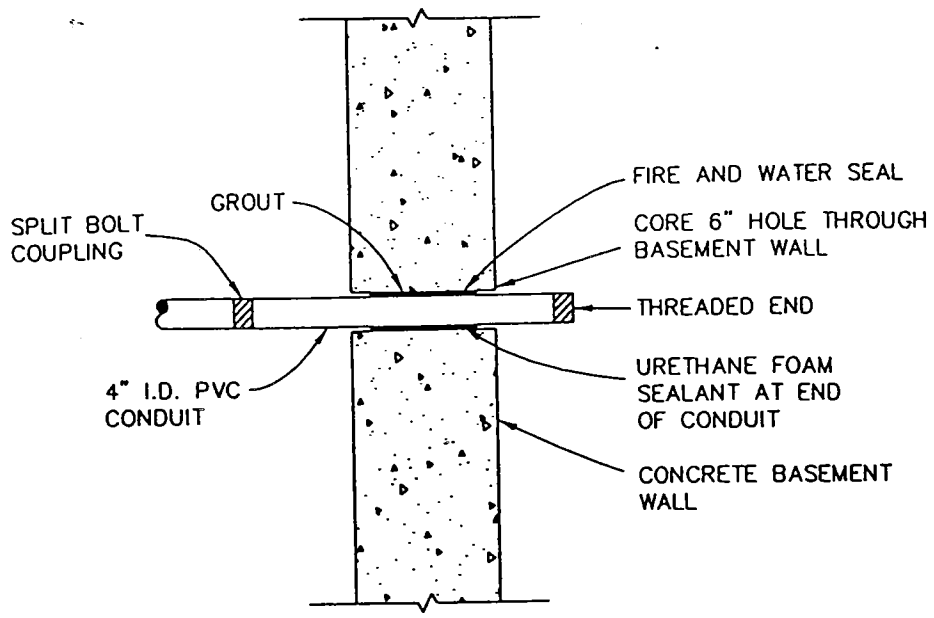

FOUNDATION CORE AND CONDUIT DETAIL
NOT TO SCALE

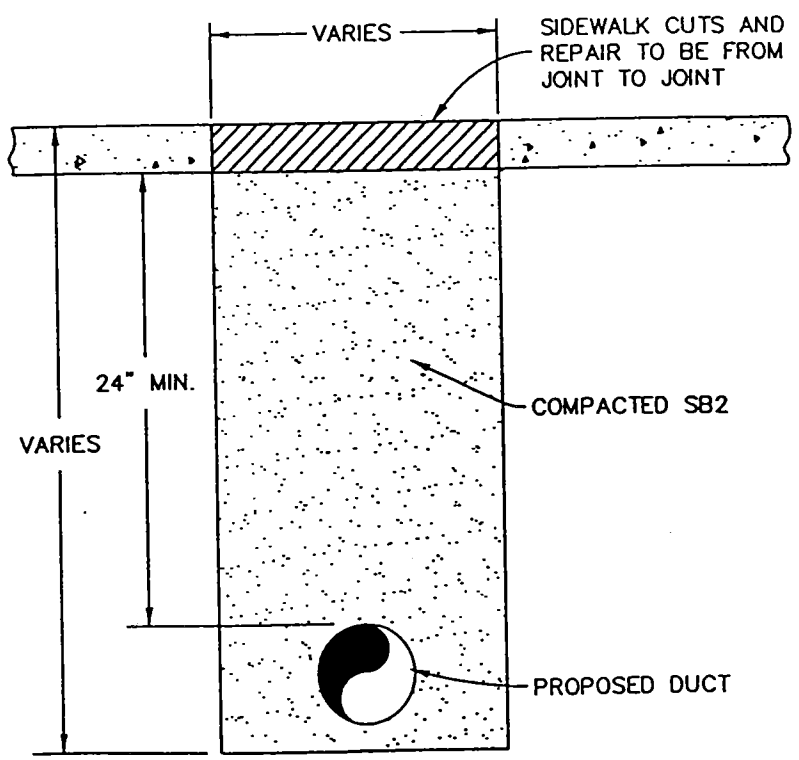

SIDEWALK CUT & REPAIR
NOT TO SCALE

Backfill with materials equal to or better than the existing pavement and base in quality. New pavement shall be 1" thicker than existing pavement, minimum of 0.25 feet. New base shall be 1" thicker than existing base, minimum of 0.5 feet.

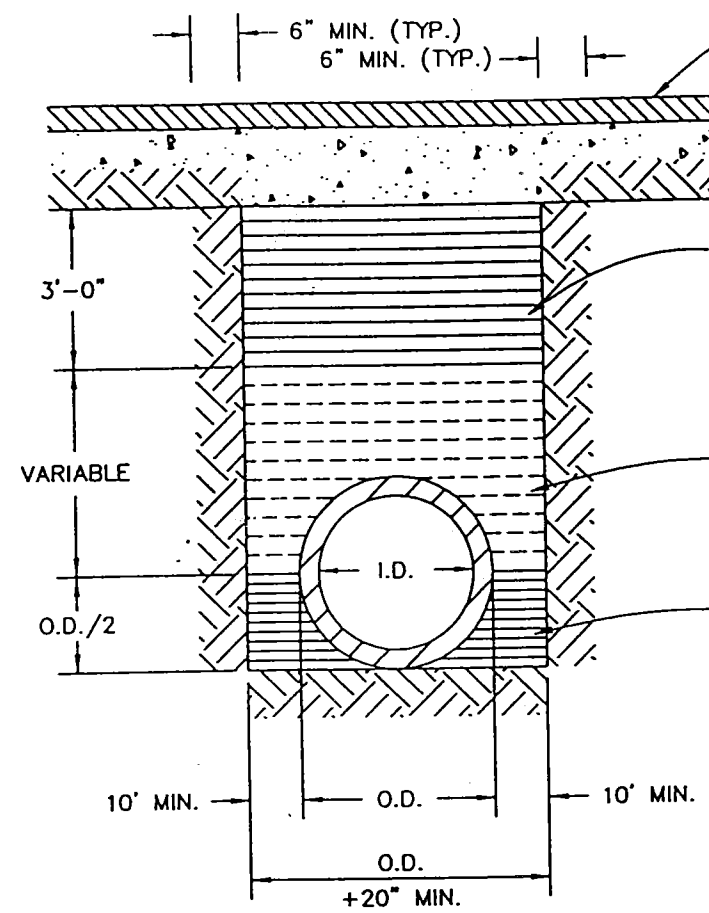

RIGID CONDUIT
NOT TO SCALE

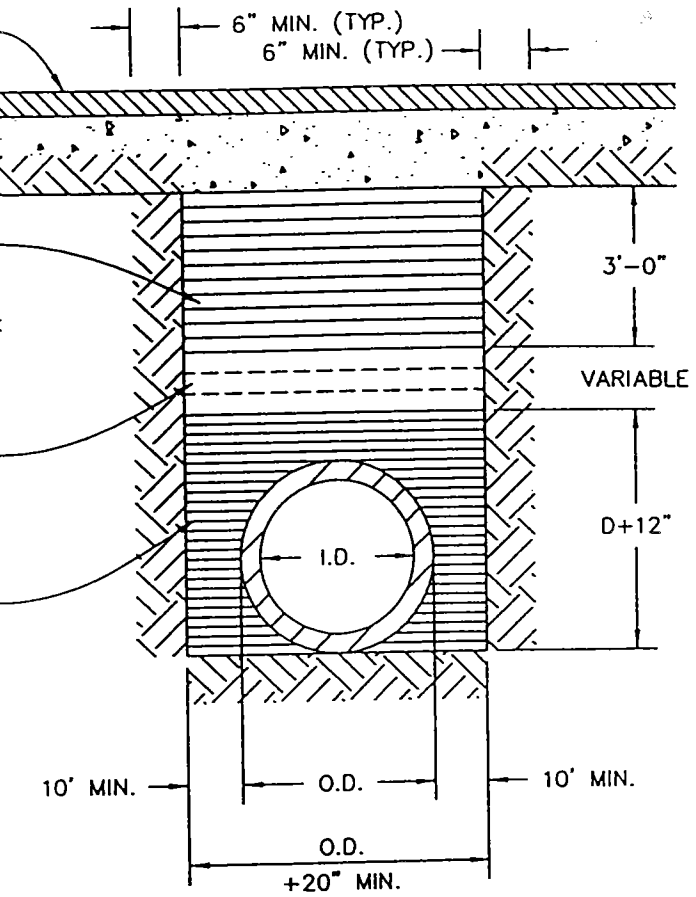

FLEXIBLE CONDUIT
NOT TO SCALE

1. Relative compaction of materials shall be tested in accordance with the State of California, Dept. of Transportation Testing Manuals, test method No. California 216 or 231.
2. All existing pavement shall be neatly cut to line prior to trench excavation.
3. Jetting or ponding will be permitted within the street Right of Way with a 3 year bond.
4. When shown by soil composition and compactability, ninety percent (90%) compaction may be used, when approved by the Director of Public Works.
5. Special bedding requirements may be shown on the plans or specified in special provisions.
6. Shoulders shall be as shown on the plans or specified in the special provisions, but in no case shall the shoulder be less than three feet wide as measure from the edge of pavement.

UNIVERSAL ENGCO, INC.
5118 S. 85th E. AVENUE
TULSA, OK 74145-8115
(918) 622-6330
FAX 918-664-6150

BROOKS FIBER COMMUNICATIONS

INFORMATION IN THIS DOCUMENT IS PROPRIETARY AND SHALL NOT BE USED, COPIED, REPRODUCED OR DISCLOSED IN WHOLE OR IN PART WITHOUT WRITTEN CONSENT OF BROOKS FIBER PROPERTIES.

TITLE:
ALTERNATIVE ACCESS TELECOMMUNICATIONS SYSTEM
STREET CUT – RESTORATION DETAILS
REV. 1

LE INFO: RESTR_CA 1=1 12/12/1996 15:37 JEB